fisair
air humidity control

INSTALLATION, USER MANUAL AND MAINTENANCE OF THE DFRIGO SERIES

MSDFRIGO-ES-20-0

FISAIR S.L. C/Uranio, 20; Pol. Ind. Aimayr, 28330 San Martín de la Vega (Madrid) Spain.
Tel: (+34) 91 692 15 14 Fax: (+34) 91 691 64 56 | info@fisair.com| fisair.com

AENOR
Registered Company
ISO 9001
RC-0529/2015

Contents

1. Introduction. 5
2. Safety Instructions
2.1 Spanish 7
2.2 English 9
2.3 German 11
2.4 French 13
3. Transport and storage 15
4. Checks to be made when taking delivery of the unit. 16
5. General description of the unit. 17
5.1 Introduction 17
5.2 Operating Principle 17
5.3 Main mechanical components 19
5.4 Main control components 20
5.5 General dimensions 22
5.6 Operating limits 23
6. Fan curves. 24
6.1 DFRIGO-0200-ECO fan curves 24
6.2 DFRIGO-0400-ECO and DFRIGO-0400-HPR fan curves 26
6.3 Calculation of the fans' air flow 28
7. Installation. 29
7.1 Service space 29
7.2 Connection to air ducts 29
7.3 Connection to the mains power supply 31
8. Handling and control. 32
8.1 Introduction 32
8.2 PLR control panel and navigation keyboard. 33
8.3 Modes of Operation 34
8.3.1 Manual mode 34
8.3.2 Automatic mode 34
8.4 Initial state 38
8.5 Configuration menu 39
8.6 Adjustments menu 41

8.7 Launching 42
8.7.1 Manual mode selection 42
8.7.2 Automatic mode selection 42
8.8 Stop 43
8.9 Emergency stop 43
8.10 Supervision menu 44
8.11 Information menu. 46
8.12 PLR connections status 46
9. List of alerts. 47
10. Maintenance. 49
10.1 Corrective maintenance 49
10.2 Maintaining the desiccant rotor 50
10.3 Maintaining the air filters. 51
11. Troubleshooting 51
12. Declaration of compliance 52
13. Guarantee 53

1. Introduction.

To ensure the correct operation of your **DFRIGO** dehumidifier, please read this manual carefully and keep it for future reference.

If there is any part of this document that you do not understand, or if you have any questions about your dehumidifier, please contact us:

FISAIR, S.L.U.

Tel.: (+34) 91 692 15 14 – Madrid – SPAIN
Fax: (+34) 91 691 64 56 – Madrid – SPAIN

Email address www.info@fisair.com

Or contact your local distributor.

IMPORTANT!

The correct use of the dehumidifier includes following our instructions for installation, set-up, operation and maintenance, as well as following the steps indicated in the instructions in the correct sequence as described.

This dehumidifier may only be used by persons who are fully qualified and authorized to do so.

Any person who transports and/or uses the unit or who works with it must read and understand the relevant section of this manual, in particular the section entitled "Safety Instructions".

You are advised to keep a copy of the user manual with the dehumidifier (or nearby).

Ignoring these instructions may invalidate all applicable guarantees and warranties.

SPANISH:

FISAIR se exime de cualquier responsabilidad a menos que se cumplan con todas las instrucciones de instalación y funcionamiento proporcionadas por FISAIR, o si los productos han sido modificados o alterados sin el consentimiento por escrito de FISAIR, o si tales productos han sido sometidos a un mal uso, mala manipulación, alteración, mantenimiento inadecuado o muestran consecuencias de accidente o utilización negligente. Estas situaciones pueden ser una conexión de alimentación incorrecta, golpes con otros objetos, anulación de seguridades, etc.

ENGLISH:

FISAIR disclaims all liability:

- **unless all installation and operating instructions provided by FISAIR are complied with**
- **if the products have been modified or altered without the written consent of FISAIR**
- **if the products have been subjected to misuse, tampering, alteration, improper maintenance or show consequences of accident or negligent use such as an incorrect power connection, impacts from other objects, security override, etc.**

GERMAN:

FISAIR lehnt jegliche Verantwortung ab, wenn nicht alle von FISAIR zur Verfügung gestellten Montage- und Betriebsanleitungen eingehalten werden oder wenn die Produkte ohne schriftliche Zustimmung von FISAIR modifiziert oder verändert wurden oder wenn diese Produkte missbräuchlicher Verwendung, unsachgemäßer Handhabung, Veränderung, unsachgemäßer Wartung ausgesetzt waren oder Folgen von Unfall oder fahrlässiger Nutzung aufweisen. Dies kann unter anderem eine falsche Stromverbindung, Schläge mit anderen Objekten, das Entfernen von Sicherheits-/Schutzvorrichtungen usw. sein.

FRENCH:

FISAIR se dégage de toute responsabilité, sauf si toutes les consignes d'installation et de fonctionnement fournies par FISAIR ont été respectées, si les produits ont été modifiés ou altérés sans le consentement par écrit de FISAIR, ou si ces produits ont été soumis à une mauvaise utilisation, une mauvaise manipulation, une altération, une maintenance inadéquate ou s'ils montrent des traces d'un accident ou d'une utilisation négligente. Ces situations peuvent être une connexion d'alimentation incorrecte, de chocs avec d'autres objet, d'annulation de sécurités, etc.

2. Notas de seguridad/Safety Instructions/Sicherheitshinweise/Notes de sécurité

2.1 Spanish

Lea con detenimiento estas notas de seguridad y examine el equipo a fin de familiarizarse con él antes de instalarlo, ponerlo en marcha o realizar operaciones de mantenimiento. Los siguientes símbolos o mensajes pueden aparecer en el presente documento o en el equipo, advierten de posibles peligros o proporcionan información que pueden ayudarle a aclarar o simplificar un procedimiento.

Atención, Tensión

La presencia de este símbolo en una etiqueta de peligro o de advertencia indica que existe riesgo de electrocutarse, lo cual puede provocar lesiones corporales o puede poner en peligro su vida sino se respetan las instrucciones.

Atención

Este es el símbolo de una alerta de seguridad. Sirve para advertirle del peligro potencial de sufrir lesiones corporales.

Respete todas las indicaciones de seguridad que acompañan a dicho símbolo para evitar toda situación que pueda ocasionar lesiones y/o averías en la unidad.

Instalación de interruptor diferencial en la línea de alimentación eléctrica.

El instalador tiene la obligación de montar un interruptor diferencial específico en la línea de alimentación eléctrica de la máquina.

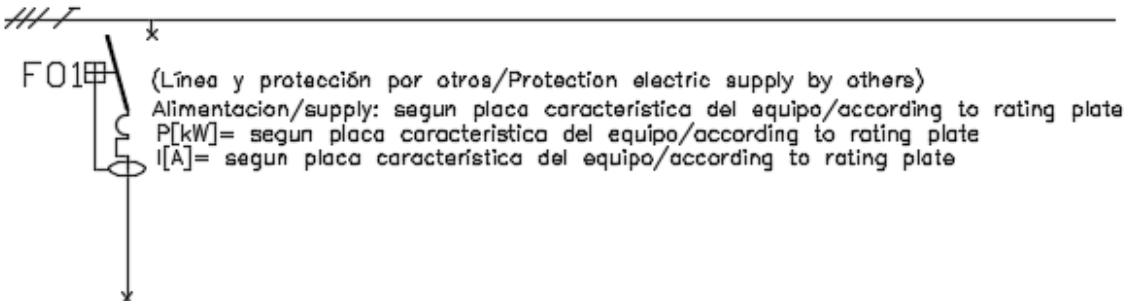

Sobre el riesgo de incendio ante uso de materiales inadecuados

Existe el riesgo de incendio o explosión en el equipo ante la entrada de materiales combustibles o inflamables en estado sólido, liquido o gaseo (tanto en la entrada del aire de reactivación como la de proceso). Ignorar estas instrucciones puede invalidar todas las garantías aplicables.

En general

- Si nota que algo funciona mal o detecta fallos en el suministro de energía eléctrica, apague la unidad inmediatamente y tome medidas para asegurarse de que no se va a poner en marcha de nuevo. Los fallos deben ser corregidos inmediatamente.
- Emplee personal debidamente cualificado para realizar los trabajos de reparación, garantizando así el funcionamiento seguro de la unidad.
- Utilice únicamente piezas de recambio originales FISAIR.
- Consulte cualquier normativa local que restrinja o regule la utilización de este deshumidificador.

Sobre el funcionamiento de la unidad

- No comprometa la seguridad de la unidad.
- Compruebe periódicamente los dispositivos de protección y aviso.
- El equipamiento de seguridad de la unidad no se debe eliminar o dejar fuera de servicio.

Sobre los componentes eléctricos

- Los trabajos que afectan a componentes eléctricos deben ser llevados a cabo por electricistas cualificados.
- Utilice únicamente fusibles de clase original y con la calibración correcta.
- Realice chequeos periódicos al equipo eléctrico.
- Los defectos, como conexiones flojas o cables quemados se deben reparar inmediatamente.

Sobre la Instalación, Desmontaje, Mantenimiento y Reparación de la unidad

- La máquina no deberá ser manipulada cuando se encuentre en funcionamiento.
- Apague la alimentación de la unidad cuando se realicen tareas de mantenimiento o reparaciones en la misma.
- No realice ampliaciones o instale equipamiento adicional en la unidad sin previa aprobación por escrito de FISAIR.

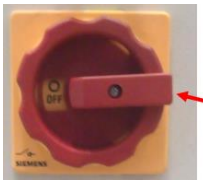

El interruptor seccionador I1 debe de colocarse en posición “0” y boqueado mediante un candado para acceder al plenum del ventilador y/o realizar cualquier acción de mantenimiento a bordo de la unidad.

De igual modo, en equipos dotados de calentador de gas o vapor para labores de mantenimiento se debe consignar la válvula de alimentación de gas combustible o vapor mediante un dispositivo loto de suministro opcional.

Parada en situación de emergencia para evacuar calor residual

El equipo no dispone de parada de emergencia general en el cuadro de mandos para evitar un posible accidente por la no evacuación del calor residual en el flujo de reactivación. Para llevar a cabo la parada frente a una situación de inminente riesgo o accidente, utilice el interruptor seccionador I1 identificado en rojo y amarillo y póngalo en posición 0.

No se debe realizar para hacer la parada funcional del equipo en un uso normal.

2.2 English

Read these safety notes carefully and examine your equipment to familiarize yourself with it before installing, commissioning, or performing maintenance operations.

The following symbols or messages, which may appear in this document or on your computer, warn of potential hazards, or provide information that can help you clarify or simplify a procedure.

Attention

The presence of this symbol on a hazard or warning label indicates that there is a risk of electrocution, which may result in life threatening injury or death if the instructions are not respected.

Attention

This is the symbol of a security alert. It serves to warn you of the potential danger of bodily injury. Observe all safety instructions that accompany this symbol to avoid any situation that may cause injury and/or damage to the unit.

Fused Isolator installation and the power supply line.

The installer is required to mount a specific fused isolator on the machine's power supply.

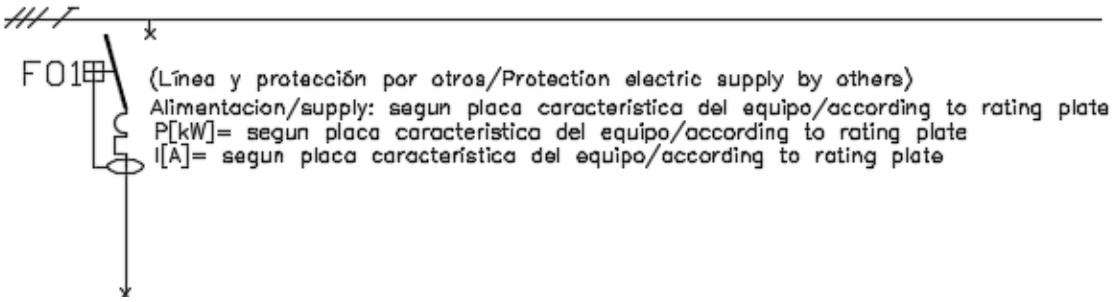

Fire risk from the use of inappropriate materials

There is a risk of fire or explosion if any combustible or flammable materials in solid, liquid or gaseous state enter the equipment (at the inlet of the reactivation air or the process air). Ignoring these instructions will invalidate all applicable warranties.

General

- If you notice a malfunction or detect power failure, turn the unit off immediately and ensure it cannot start up again.
- Problems must be fixed immediately.
- Use properly qualified personnel to carry out repair work, thus ensuring the safe operation of the unit.
- Use only original FISAIR spare parts.
- Refer to any local regulations that restrict or regulate the use of this dehumidifier.

Operation of the unit

- Do not compromise the safety of the unit.
- Periodically check the protection and warning devices.
- The safety equipment of the unit must not be removed or left out of service.

Electrical components

- Work affecting electrical components must be carried out by qualified electricians.
- Use only original class fuses with correct calibration.
- Perform regular checkups on the electrical equipment.
- Defects, such as loose connections or burnt cables, should be repaired immediately.

Installation, Disassembly, Maintenance and Repair of the Unit

- The machine must not be tampered with when in operation.
- Turn off power to the unit when maintenance or repairs are being performed.
- Do not upgrade or install additional equipment on the unit without prior written approval from FISAIR.

The I1 isolator switch must be placed in the "0" position and locked out with a padlock to access the fan plenum and/or perform any maintenance action within the unit.

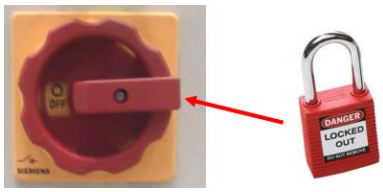

Similarly, the fuel, gas or steam feed valves must be locked out in gas or steam equipment by means of a suitable mechanical valve lockout, for maintenance.

Emergency stop to evacuate waste heat

The equipment does not have a general emergency stop on the control panel. This is to avoid a possible accident due to not removing waste heat in the reactivation flow. To stop in a situation of imminent risk or accident, use the I1 isolator identified in red and yellow and set it to position 0.

This should not be used to for a normal stop of the equipment.

2.3 German

Lesen Sie diese Sicherheitshinweise aufmerksam durch und prüfen Sie das Gerät, bevor Sie es installieren, in Betrieb nehmen oder Wartungsarbeiten durchführen.

Die folgenden Symbole oder Meldungen können in diesem Dokument oder auf dem Gerät erscheinen, vor möglichen Gefahren warnen oder Informationen bereitstellen, die zur Klärung oder Vereinfachung des Verfahrens beitragen können.

Vorsicht, Spannung

Das Vorhandensein dieses Symbols auf einem Gefahren- oder Warnschild weist auf das Risiko eines Stromschlags hin, der zu Körperverletzungen oder zu lebensgefährlichen Situationen führen kann, wenn die Anweisungen nicht befolgt werden.

Achtung

Dies ist das Symbol eines Sicherheitsalarms. Das Symbol warnt Sie vor möglichen Verletzungsgefahren.

Beachten Sie alle Sicherheitshinweise zu diesem Symbol, um Situationen zu vermeiden, die Verletzungen und/oder Schäden am Gerät verursachen können.

Installation eines Differenzialschalters an der Stromversorgungsleitung.

Der Installateur ist verpflichtet, einen speziellen Differenzialschalter an der Stromversorgungsleitung des Geräts anzubringen.

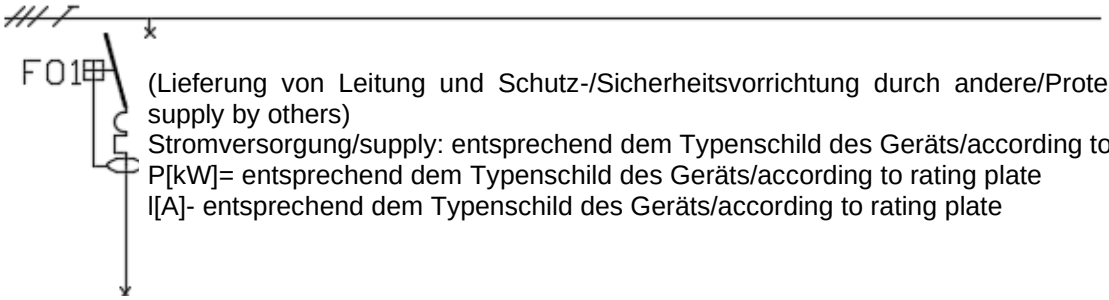

(Lieferung von Leitung und Schutz-/Sicherheitsvorrichtung durch andere/Protection electric supply by others)
Stromversorgung/supply: entsprechend dem Typenschild des Geräts/according to rating plate
P[kW]= entsprechend dem Typenschild des Geräts/according to rating plate
I[A]- entsprechend dem Typenschild des Geräts/according to rating plate

Brandgefahr bei Verwendung ungeeigneter Materialien

Es besteht Brand- oder Explosionsgefahr im Gerät, wenn brennbare oder entflammbare Stoffe in festem, flüssigem oder gasförmigem Zustand (im Einlass von Reaktivierungsluft und Prozessluft) eintreten.
Durch die Nichteinhaltung dieser Anweisungen können alle geltenden Garantien ihre Gültigkeit verlieren.

Allgemeines

- Wenn Sie eine Fehlfunktion oder einen Stromausfall feststellen, schalten Sie das Gerät sofort aus und ergreifen Sie Maßnahmen, um sicherzustellen, dass es nicht wieder eingeschaltet wird. Fehler sind sofort zu beheben.
- Verwenden Sie nur Original-FISAIR-Ersatzteile.

- Um einen sicheren Betrieb des Geräts zu gewährleisten, dürfen Reparaturarbeiten nur von entsprechend qualifiziertem Personal durchgeführt werden.
- Beachten Sie lokale Vorschriften, die den Einsatz dieses Luftentfeuchters regeln bzw. einschränken.

Über den Betrieb des Geräts

- Tun Sie nichts, was die Sicherheit des Geräts gefährdet.
- Überprüfen Sie regelmäßig die Schutz- und Warnvorrichtungen.
- Die Sicherheitseinrichtung des Geräts darf nicht entfernt oder außer Betrieb genommen werden.

Über die elektrischen Komponenten

- Arbeiten an elektrischen Komponenten dürfen nur von Elektrofachkräften ausgeführt werden.
- Verwenden Sie nur korrekt kalibrierte Sicherungen der ursprünglichen Klasse.
- Führen Sie regelmäßige Kontrollen an den elektrischen Geräten durch.
- Defekte wie lose Verbindungen oder verbrannte Drähte müssen sofort repariert werden.

Installation, Demontage, Wartung und Reparatur des Geräts

- Während des Betriebs darf nicht an dem Gerät herumhantiert werden.
- Schalten Sie das Gerät aus, wenn Wartungsarbeiten oder Reparaturen am Gerät durchgeführt werden müssen.
- Nehmen Sie keine Erweiterungen vor und installieren Sie keine zusätzlichen Geräte ohne vorherige schriftliche Genehmigung von FISAIR.

Der Trennschalter I1 muss auf Position „0“ gestellt und mit einem Vorhängeschloss verriegelt werden, das den Zugang zum Plenum des Gebläses und/oder für jegliche Art von Wartungsarbeiten an dem Gerät absichert.

Gleichermaßen muss bei Gas- oder Dampfanlagen für Wartungsarbeiten das Gas- oder Dampfzufuhrventil mit einer Wartungssicherung (LOTO) versehen werden, die optional mitgeliefert werden kann.

Notstopp zur Ableitung der Abwärme

Das Gerät verfügt nicht über eine allgemeine Notabschaltung auf der Schalttafel, um einen möglichen Unfall aufgrund einer Nichtableitung der Abwärme im Reaktivierungsstrom zu vermeiden. Für eine Abschaltung des Geräts im Falle einer unmittelbaren Gefahr oder eines Unfalls stellen Sie den rotgelben Trennschalter I1 auf Position 0. Eine solche Abschaltung darf nicht durchgeführt werden, um das Gerät bei Normalbetrieb abzuschalten.

2.4 French

Veuillez lire attentivement ces notes de sécurité et bien examiner l'appareil afin de vous familiariser avec lui avant son installation, sa mise en marche et les opérations de maintenance.
Les symboles ou messages suivants peuvent apparaître dans le présent document ou sur la machine, pour prévenir de dangers éventuels ou apporter des informations susceptibles de vous aider à mieux comprendre ou à simplifier une procédure.

Attention, Tension

La présence de ce symbole sur une étiquette de danger ou d'avertissement indique l'existence d'un risque d'électrocution, ce qui peut provoquer des blessures corporelles ou mettre en danger votre vie si les instructions ne sont pas respectées.

Attention

C'est le symbole d'une alerte de sécurité. Il vise à vous prévenir d'un danger potentiel de blessures corporelles.

Veuillez respecter toutes les indications de sécurité qui accompagnent ce symbole pour éviter toute situation pouvant entraîner des blessures et/ou des pannes de la machine.

Installation d'un interrupteur différentiel sur la ligne d'alimentation électrique.

L'installateur a l'obligation de monter un interrupteur différentiel spécifique sur la ligne d'alimentation électrique de la machine.

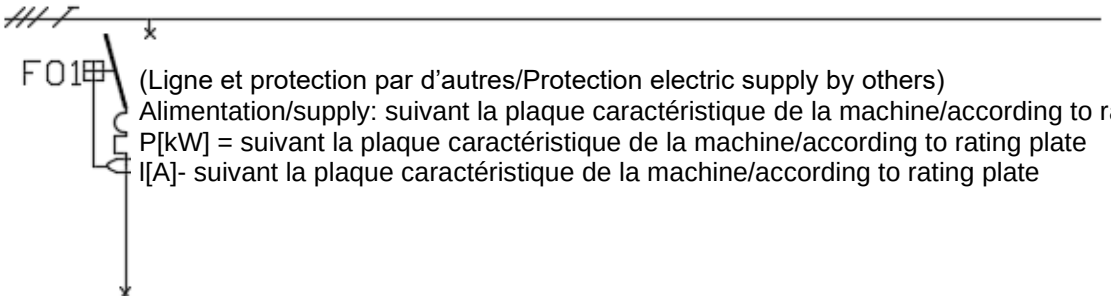

(Ligne et protection par d'autres/Protection electric supply by others)
Alimentation/supply: suivant la plaque caractéristique de la machine/according to rating plate
P[kW] = suivant la plaque caractéristique de la machine/according to rating plate
I[A]- suivant la plaque caractéristique de la machine/according to rating plate

Concernant le risque d'incendie dû à l'utilisation de matériel inadéquat

Il existe un risque d'incendie ou d'explosion sur la machine en cas d'entrée de matériaux combustibles ou inflammables à l'état solide, liquide ou gazeux (au niveau de l'entrée de l'air de réactivation et de l'entrée de processus). Le manquement à ces consignes peut invalider toutes les garanties en vigueur.

En général

- Si vous remarquez que quelque chose fonctionne mal ou si vous détectez des pannes au niveau de l'alimentation en énergie électrique, éteignez immédiatement la machine et prenez des mesures pour vous assurer que la machine ne va pas être remise en marche. Les pannes doivent être immédiatement corrigées.

- Utilisez uniquement des pièces de rechange originales FISAIR.
- Faites appel à du personnel dûment qualifié pour effectuer les travaux de réparation, pour garantir ainsi le fonctionnement sécurisé de la machine.
- Consultez la réglementation locale qui restreint ou régule l'utilisation de ce déshumidificateur.

Concernant le fonctionnement de la machine

- Veillez à la sécurité de la machine.
- Vérifiez régulièrement les dispositifs de protection et d'alerte.
- L'équipement de sécurité de la machine ne doit pas être éliminé ou mis hors service.

Concernant les composants électriques

- Les travaux qui affectent les composants électriques doivent être effectués par des électriciens qualifiés.
- Utilisez uniquement des fusibles de classe originale et de bon calibre.
- Révisez régulièrement l'équipement électrique.
- Les défauts, tels que les connexions distendues ou les câbles brûlés, doivent être réparés immédiatement.

Concernant l'installation, le démontage, la maintenance et la réparation de la machine

- La machine ne devra pas être manipulée lorsqu'elle fonctionne.
- Éteignez l'alimentation de la machine pendant les travaux de maintenance ou de réparation.
- N'effectuez pas d'agrandissement et n'installez pas d'équipement supplémentaire sur la machine sans l'accord préalable écrit de FISAIR.

L'interrupteur sectionneur I1 doit être placé sur la position « 0 » et bloqué avec un cadenas pour accéder au plenum du ventilateur et/ou réaliser n'importe quelle action de maintenance sur la machine.

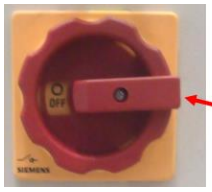

De même, sur les équipements à gaz ou à vapeur pour les travaux de maintenance, il faut consigner le robinet d'alimentation en gaz combustible ou en vapeur à l'aide d'un dispositif loto fourni en option.

Arrêt en situation d'urgence pour évacuer la chaleur résiduelle

L'équipement ne dispose pas d'arrêt d'urgence général sur le tableau de commandes afin d'éviter tout accident dû à la non-évacuation de la chaleur résiduelle dans le flux de réactivation. Pour arrêter la machine en cas de situation de danger ou d'accident imminent, utilisez l'interrupteur sectionneur I1 marqué en rouge et jaune et mettez-le sur la position.

Cette manœuvre ne doit pas servir à l'arrêt fonctionnel de la machine lors d'une utilisation normale.

3. Transport and storage.

When in transit, the unit must be protected from impacts of any kind, and all possible measures must be taken to prevent malfunctions due to improper loading or unloading of the unit.

When lifting the unit, always use a

Keep the unit dry and protected from the elements while in storage.

The unit must be stored in a location where the ambient temperature is between -15ºC and 40ºC and with a relative humidity of no more than 95%.

4. Checks to be made when taking delivery of the unit.

When taking delivery of the unit, ensure that:

- The type, model, size, serial number, voltage and electrical connection to the power supply indicated on the unit's rating plate match the information on the order and delivery note. You can find the unit's rating plate on the outside of the electrical board (see point 5.3 "Main mechanical components").
- Check that the unit is complete and in perfect condition.
- If any components are missing or the unit is not in perfect condition, contact the supplier immediately.

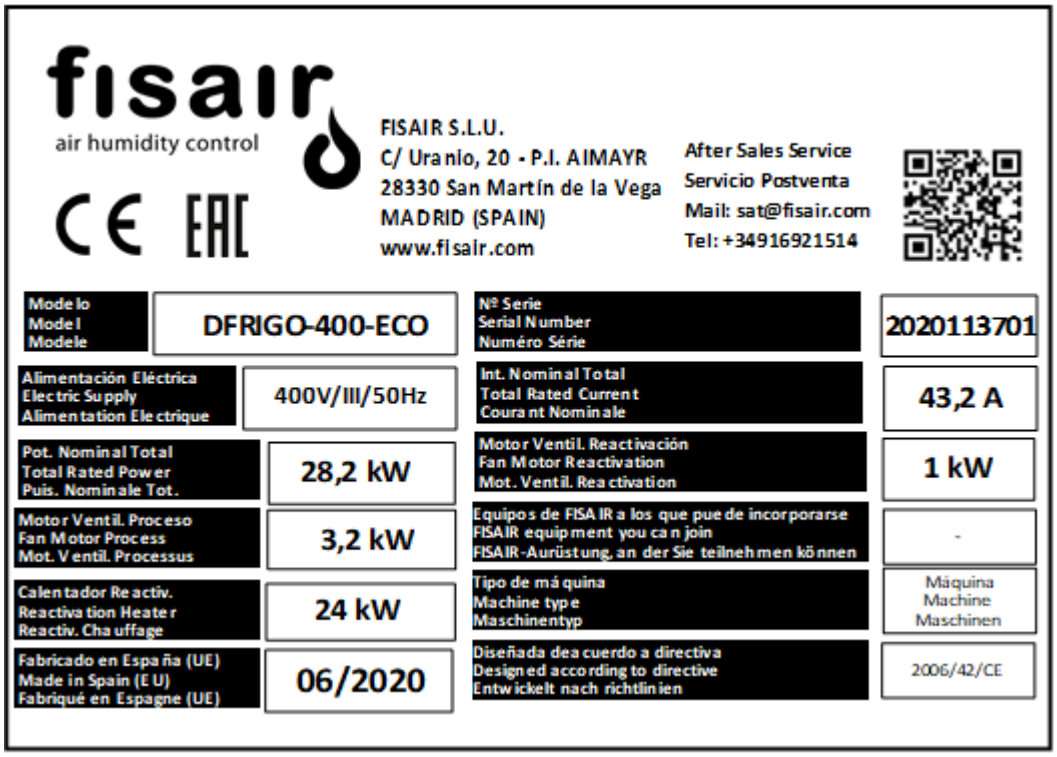

Figure 1: Example of a rating plate for a DFRIGO-ECO

5. General description of the unit.

5.1 Introduction

Our humidifiers are designed to operate uniformly and continuously, to be easy to install and require minimal maintenance. The high-performance silica gel drying rotor extracts the humidity from the air treated by adsorbing the water vapour molecules, which means that it behaves consistently even in conditions of low humidity.

Synthesized silica gel is a material that is stable both chemically and thermally, so it does not result in deliquescence (the process whereby a substance absorbs moisture from the atmosphere), unlike other desiccant materials. This means that it behaves and performs consistently and therefore our products have long working lives.

It's chemical resistance, together with the fact that it is water-washable, contributes to it's durability. Standard units can achieve dew point values of up to -25ºC for treated air humidity.

5.2 Operating Principle

The straightforward operation of our DFRIGO series of dehumidifiers consists of two continuous and simultaneous airflows running in opposite directions through the desiccant rotor, and, in the case of the DFRIGO-ECO series, also through a heat-exchanger plate.

A flow of air to be dried (process air) and a fan reactivation flow (moist air).

Having been filtered, the process air passes through the desiccant rotor, shedding most of the water it contains; it is then extracted from the dehumidifier by a ventilator fan as dry air (in the case of DFRIGO-ECO models, this dry air passes through the heat exchanger plate to shed the sensible heat gained on the rotor) and driven to the system or zone to be treated.

In DFRIGO-ECO models the heat exchanger plate enables the process to be isenthalpic.

In DFRIGO-HPR models the flow exchanger enables air from outside to be used for reactivation.

The reactivation air from the rotor is drawn in from outside, filtered, pre-heated in the heat exchanger plate (only in DFRIGO-ECO models) and post-heated by a heater that uses electrical resistance.

Once it has reached the temperature necessary to convey the water vapour retained by the desiccant rotor, a fan extracts this moist air from the dehumidifier to be expelled to the exterior.

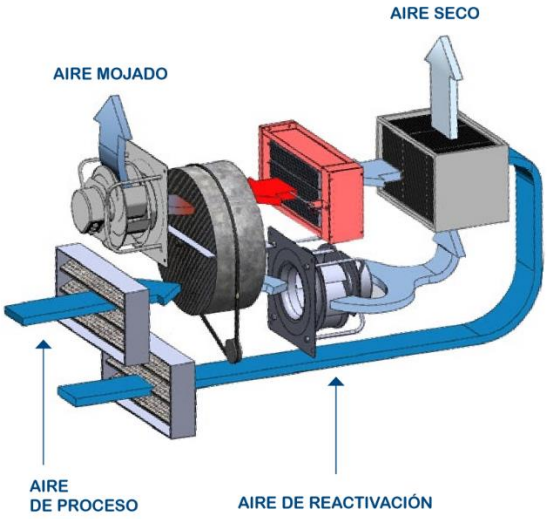

Figure 2: DFRIGO-ECO Operating Principle

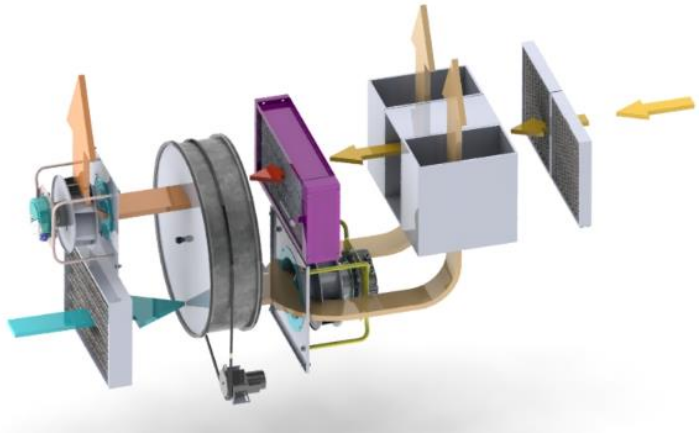

Figure 3: DFRIGO-HPR Operating Principle

5.3 Main mechanical components

(Figures 4 and 5)

1. Basic module
2. Silica gel dryer rotor.
3. Rotor drive system
4. Reactivation air heater
5. Control and protection electrical board and the unit's identifying plate.
6. Dry air fan
7. Wet air fan
8. Heat-sensitive static heat exchanger
9. Process air filter
10. Reactivation air filter
11. Flow exchanger

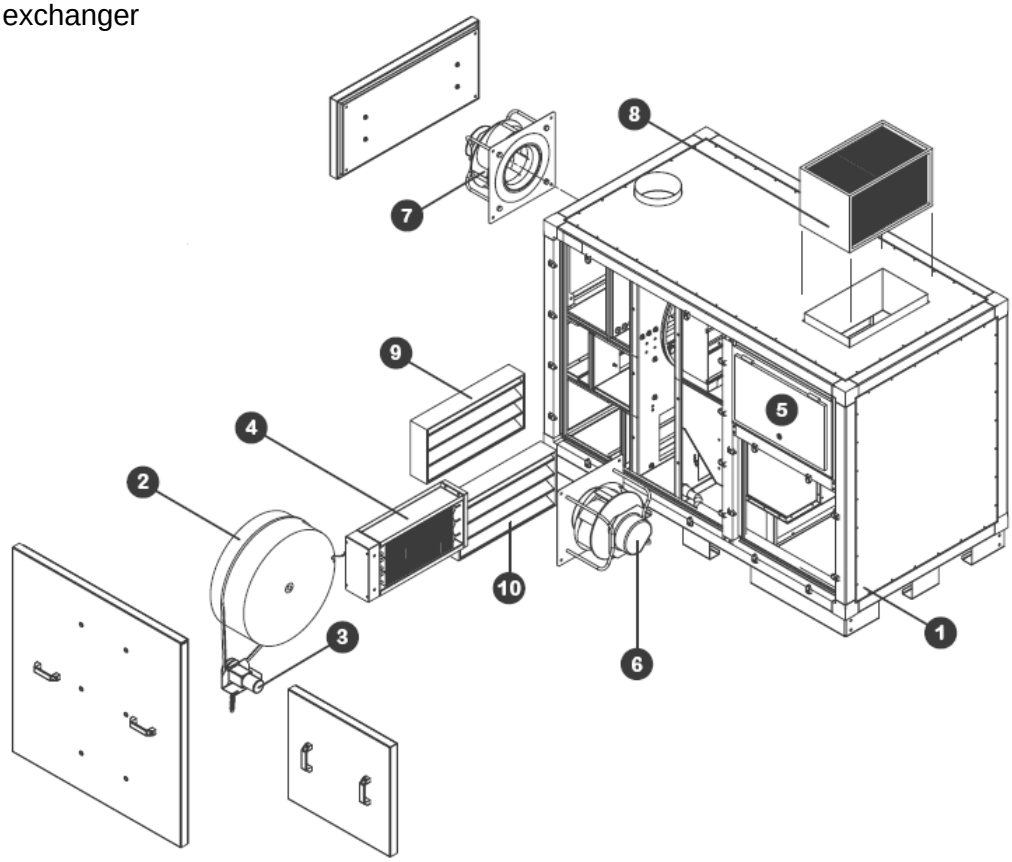

Figure 4: Main DFRIGO-ECO components

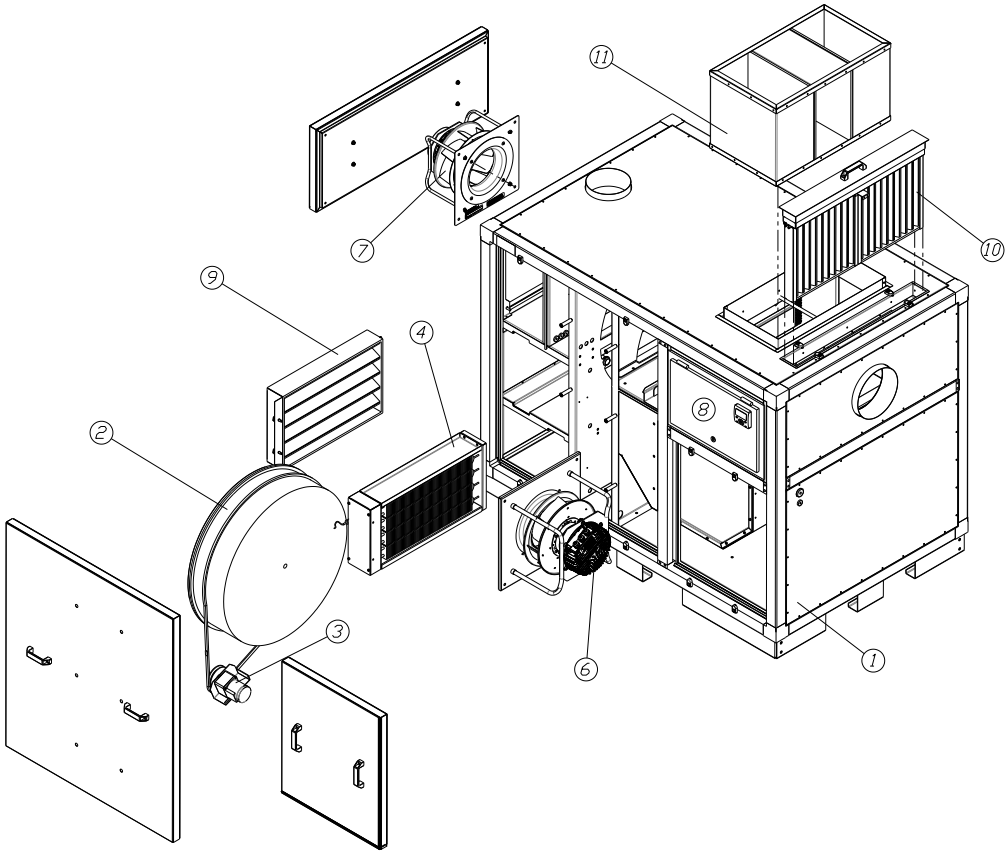

Figure 5: Main DFRIGO-HPR components

5.4 Main control components

(Figures 6 and 7)

1. HMI. Display + IP-55 keyboard
2. Pressure transmitter for calculating the process flow
3. Pressure transmitter for calculating the reactivation flow
4. Reactivation air temperature sensor
5. Inductive detector for rotation control
6. Differential pressure switch for the process dirty filter alarm.
7. Differential pressure switch for the reactivation dirty filter alarm.
8. Supply air temperature sensor.

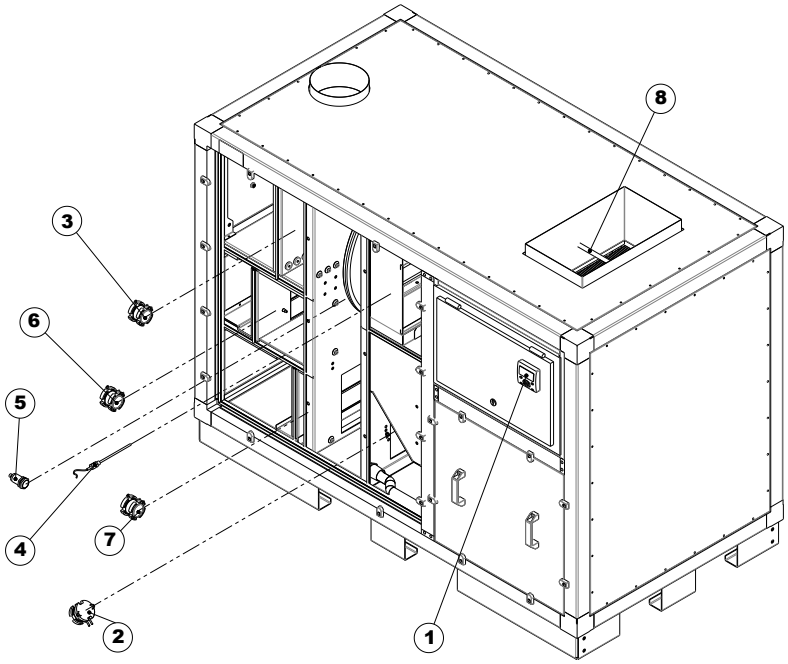

Figure 6: Main DFRIGO-ECO control components

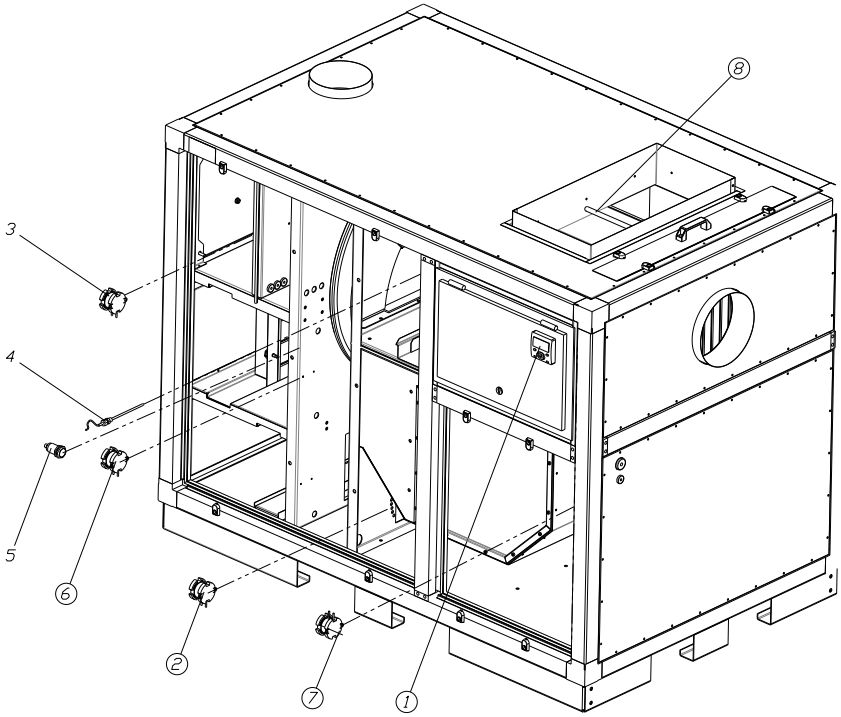

Figure 7: Main DFRIGO-HPR control components

5.5 General dimensions

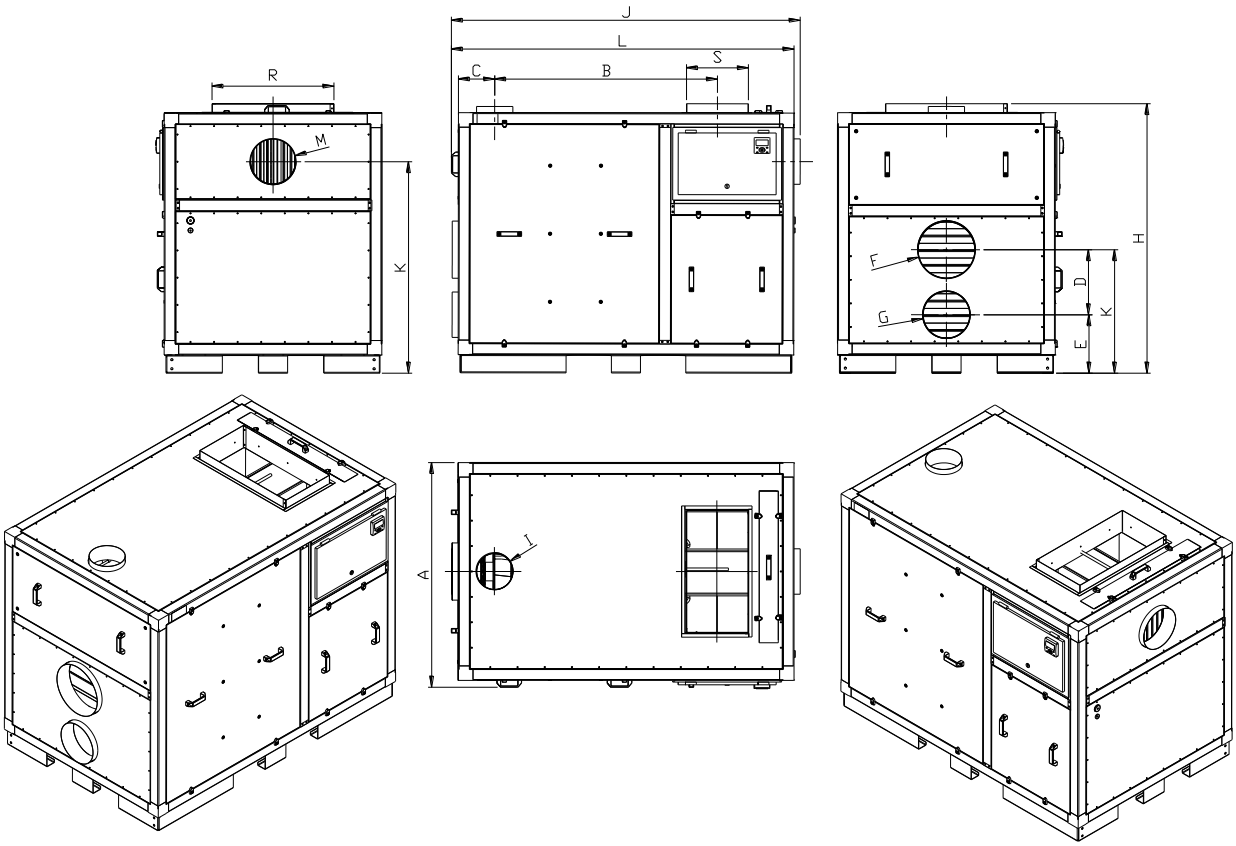

	DFRIGO-0200-ECO	DFRIGO-0400-ECO	DFRIGO-0400-HPR
L	1856mm	1889mm	1922mm
A	1018mm	1238mm	1238mm
H	1343mm	1485mm	1485mm
B	1254mm	1225mm	1225mm
C	200mm	200mm	200mm
D	305mm	359mm	-
E	325mm	320mm	-
F	∅ 200mm	∅ 315mm	∅ 315mm
G	∅ 200mm	∅ 250mm	-
I	∅ 200mm	∅ 200mm	∅ 200mm
J	-	-	679mm
K	-	-	1165mm
M	-	-	∅ 250mm
R	472mm	672mm	672mm
S	272mm	342mm	342mm
Weight	440kg.	540kg.	576kg.

5.6 Operating limits

The performance of the unit will be affected by the working conditions. If your unit needs to work under any other operating conditions, please contact your supplier.

Parameters	FISAIR Dehumidifier Series				
	DFRA DFLEX DFRC	DFRIGO-ECO	DFRIGO-HPR	DFRB	DFRD
Process inlet dry bulb temperature range	2°C to 55°C (1)	-20°C to 15°C	-25°C to 15°C	5°C to 40°C	5°C to 40°C
Process inlet relative humidity range	No restrictions				
Reactivation inlet dry bulb temperature range	-10°C to 55°C	(2)	-25°C to 35°C	Same as the process air flow	5°C to 40°C
Reactivation inlet relative humidity range	No restrictions				
Designed to be installed under the direct action of the rain and sun	(3)	Additional protection should be sourced.			
Temperature range in the area where you will install the unit	-10°C to 50°C	-20°C to 40°C (4)	-20°C to 40°C (4)	5°C to 50°C	5°C to 50°C
Relative humidity in the area where you will install the unit	< 95%	< 95%	< 95%	< 95%	< 95%

(1) Process inlet dry bulb temperature under 5°C could be possible for units with pre-heating coils (only for DFRA/DFLEX).
(2) Process air and reactivation air must be at the same conditions (temperature and humidity).
(3) Not available for the DFRA series. Available on special request for the DFLEX series and as standard for the DFRC series.
(4) Contact FISAIR to confirm these values for your application.

6. Fan curves.

6.1 DFRIGO-0200-ECO fan curves

Process/dry air fan curve

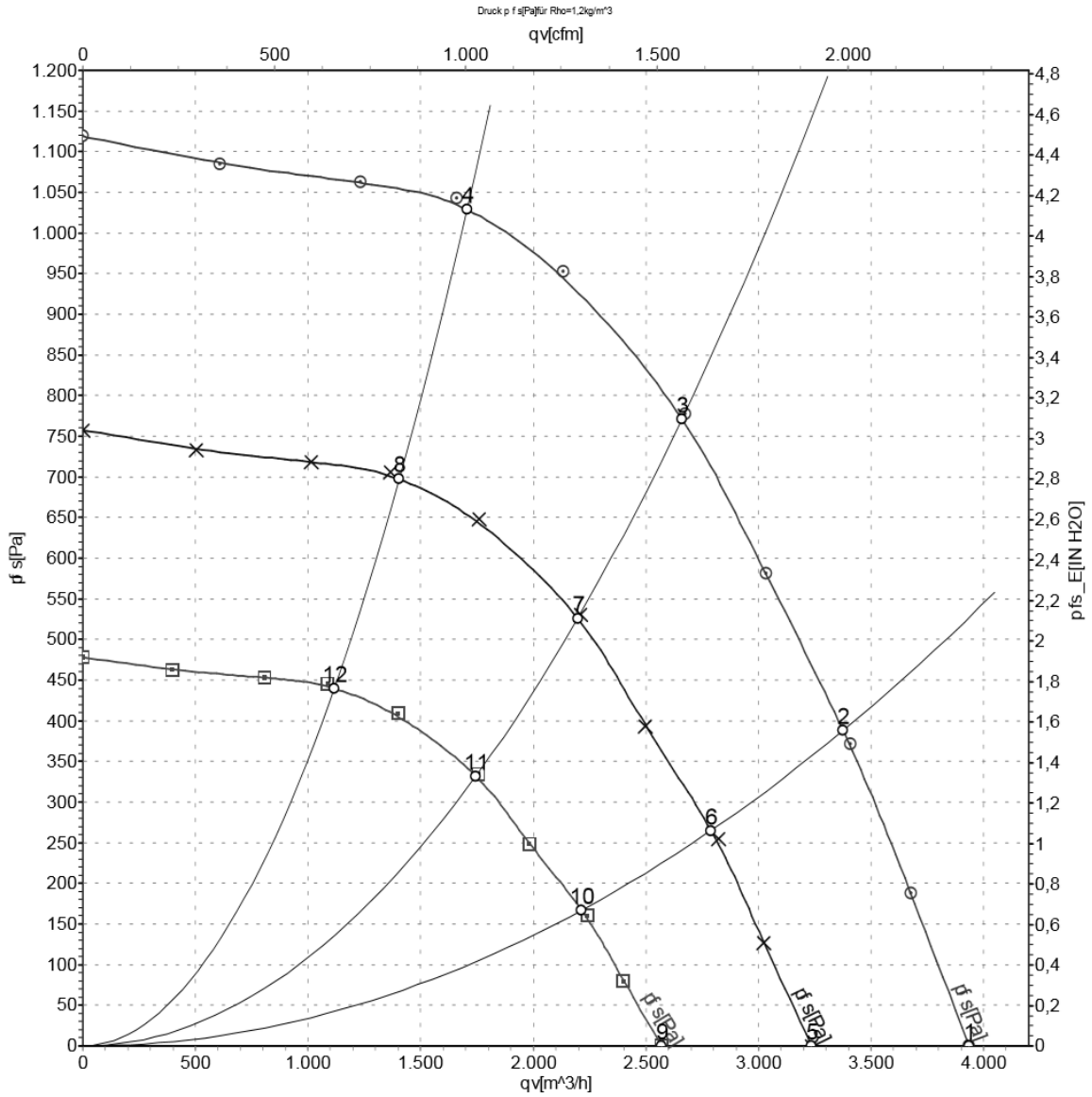

Air density data: 1.2 kg/m^3 - 400V/50Hz

qv = Airflow

pfs = Static pressure

Points 1,2,3 and 4 relate to the fan rotating at **3,100 RPM.**

Points 5,6,7 and 8 relate to the fan rotating at **2,575 RPM.**

Points 9, 10,11 and 12 relate to the fan rotating at **2,075 RPM.**

Reactivation/moist air fan curve

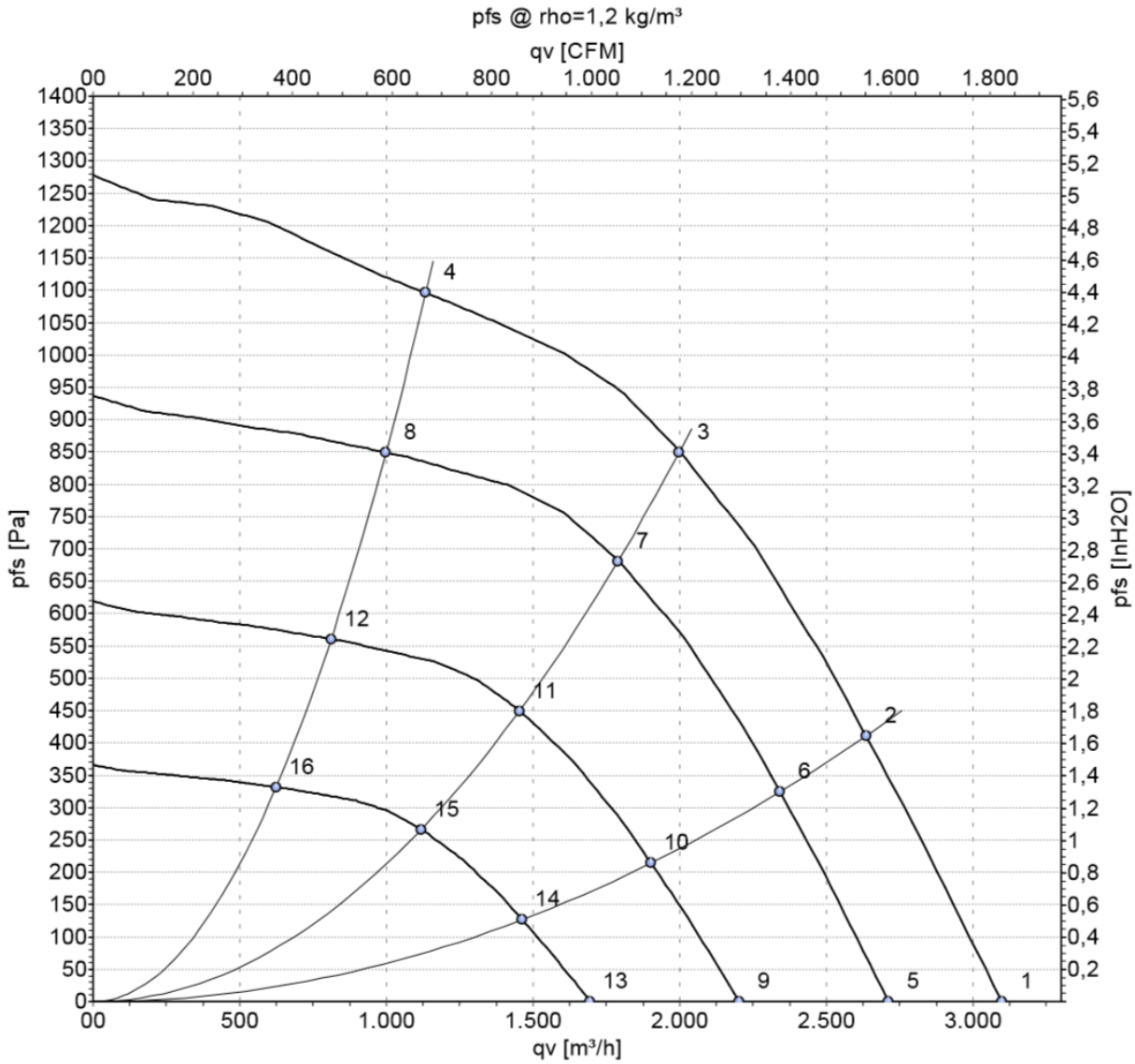

Air density data: 1.2 kg/m^3 - 400V/50Hz

qv = Airflow

pfs = Static pressure

Points 1,2,3 and 4 relate to the ventilator rotating at **3600 rpm.**

Points 5,6,7 and 8 relate to the ventilator rotating at **3200 rpm.**

Points 9, 10,11 and 12 relate to the fan rotating at **2,600 RPM.**

Points 13,14,15 and 16 relate to the fan rotating at **2000 RPM.**

6.2 DFRIGO-0400-ECO and DFRIGO-0400-HPR fan curves

Process/dry air fan curve

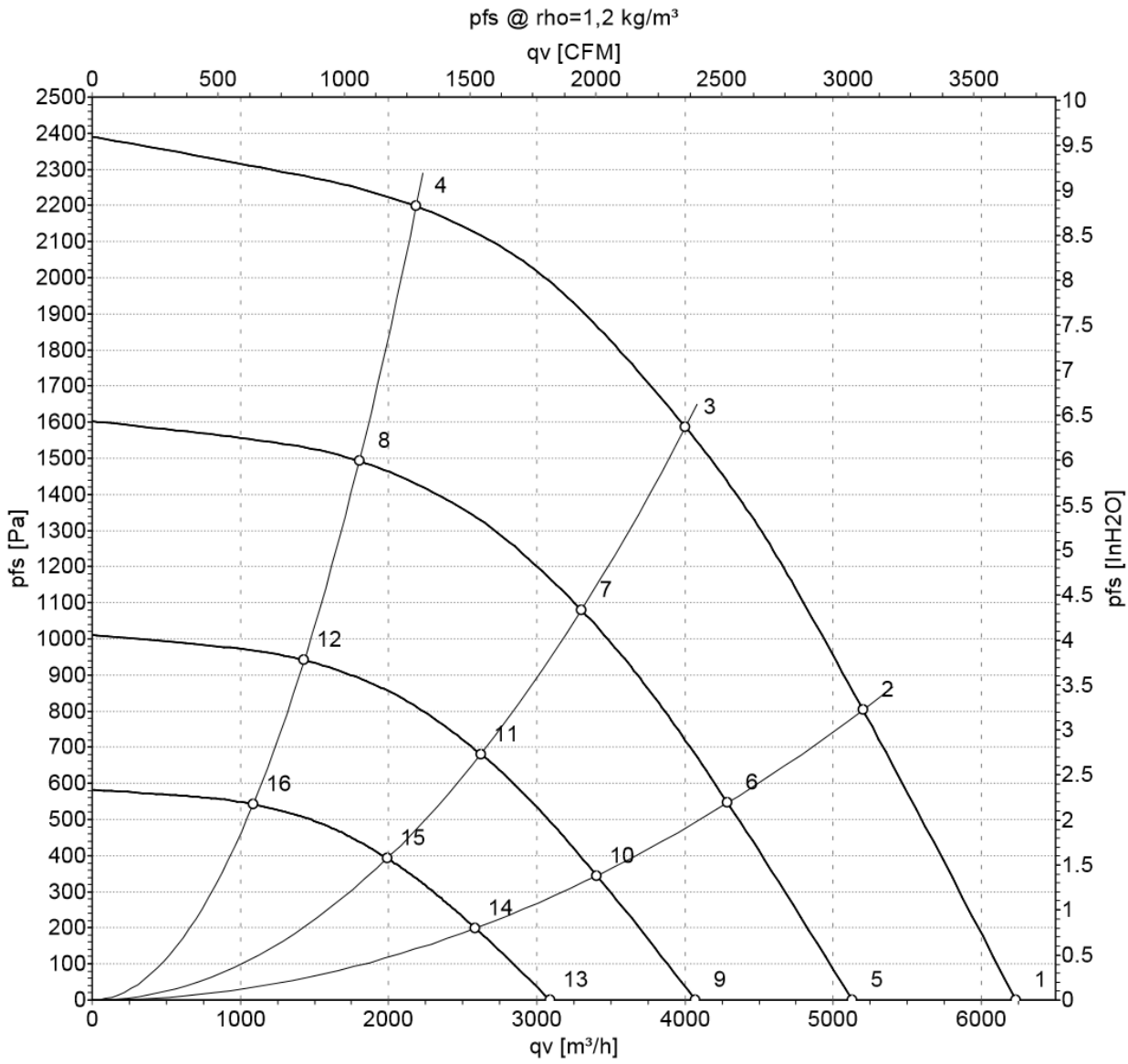

Air density data: 1.2 kg/m^3 - 400V/50Hz

qv = Airflow

pfs = Static pressure

Points 1,2,3 and 4 relate to the ventilator rotating at **4100 rpm.**

Points 5,6,7 and 8 relate to the fan rotating at **3400 RPM.**

Points 9, 10,11 and 12 relate to the fan rotating at **2700 RPM.**

Points 13,14,15 and 16 relate to the fan rotating at **2050 RPM.**

Reactivation/wet air fan curve

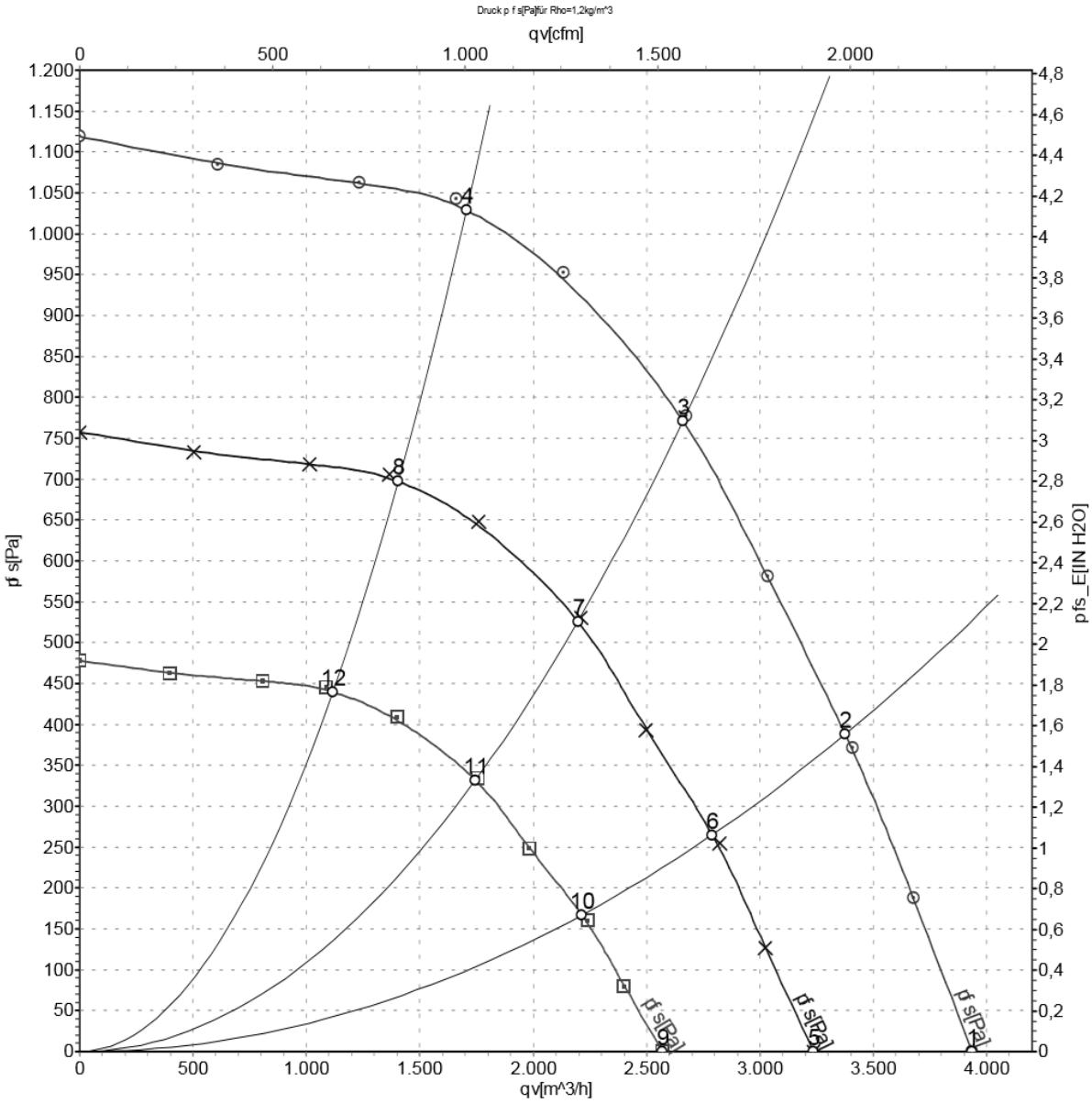

Air density data: 1.2 kg/m^3 - 400V/50Hz

qv = Airflow

pfs = Static pressure

Points 1,2,3 and 4 relate to the fan rotating at **3,100 RPM.**

Points 5,6,7 and 8 relate to the fan rotating at **2575 RPM.**

Points 9, 10,11 and 12 relate to the fan rotating at **2045 RPM.**

6.3 Calculation of the fans' air flow

You can obtain the air flow that moves each of the dehumidifier's fans by using the following equations:

FAN	**DFRIGO-0200-ECO**	**DFRIGO-0400-ECO** **DFRIGO-0400-HPR**
Process air (dry air)	$Q = 93 \times \sqrt{(1.2/rho) \times BQ1}$	$Q = 116 \times \sqrt{(1.2/rho) \times BQ1}$
Reactivation air (moist air)	$Q = 70 \times \sqrt{(1.2/rho) \times BQ2}$	$Q = 93 \times \sqrt{(1.2/rho) \times BQ2}$

Q = Air flow in m3/h.

rho = Density of the air as it passes through the fan in kg/m3.

BQ1 = Differential pressure measured by the process fan probe in Pa.

BQ2 = Differential pressure measured by the reactivation fan probe in Pa.

(See point 8.10 of this manual to find out how to obtain the values BQ1 and BQ2 from the unit's display).

7. Installation.

Before starting to install the unit, the following points need to be considered:

- The unit is designed for indoor installation; it must never be installed directly exposed to the elements. If the unit must be installed outside, then it should be provided with suitable protection against the effects of sunlight and rain.
- The place selected must be suitable to install the unit. When selecting the place where the unit is going to be installed, one must take due account of the dehumidifier's external dimensions and the space required for its inspection and maintenance. (See point 5.5 in this manual for the dimensions of the unit).

7.1 Service space

It is important to take due account of the service space when installing the unit. This space is necessary as the following need to be carried out on a periodic basis:

- Clean/replace the process and reactivation air filters.
- Check the status of the desiccant rotor fan surfaces, air circuit sealing joints, drive belt and reducer-motor (and, where required, their repair or replacement).
- Check that the dry air and wet air motor-fans are working correctly.
- Check the reactivation air heater is working correctly.
- Check that the sensible heat exchanger is in perfect condition.
- Gain access to the inside of the control and protection electrical board, and, if required, carry out repairs.

7.2 Connection to air ducts

The installation technician must be familiar with the sizing and the layout of the air ducts; however, it is important to pay special attention to the following points:

- Ensure that the pressure available to the fans has been considered when designing the correct size of the ducts, so the equipment can operate at nominal flow rates.
- The equipment has control dampers in the suction of both air circuits, for isolation during inactivity and to adjust the available fan pressure.
- The outside air intake must be protected (by grids or mesh) to protect against entry of foreign matter, e.g. leaves, insects and rainwater.
- The external air intake and the wet air outlet must be kept separate (minimum 3m) so as not to affect the equipment performance.
- Provision must be made for the removal of any cooled condensation produced in the wet air duct during operation. This can be achieved by ensuring a downward inclination towards the outside, for horizontal ductwork. Ensure that upward slopes are adequately insulated or drill a hole larger than 5mm at the lowest point to remove any condensation. This prevents it returning to the unit or restricting airflow inside the duct.

In the following image, you can see two examples of the installation and connection of air ducts to the DFRIGO unit.

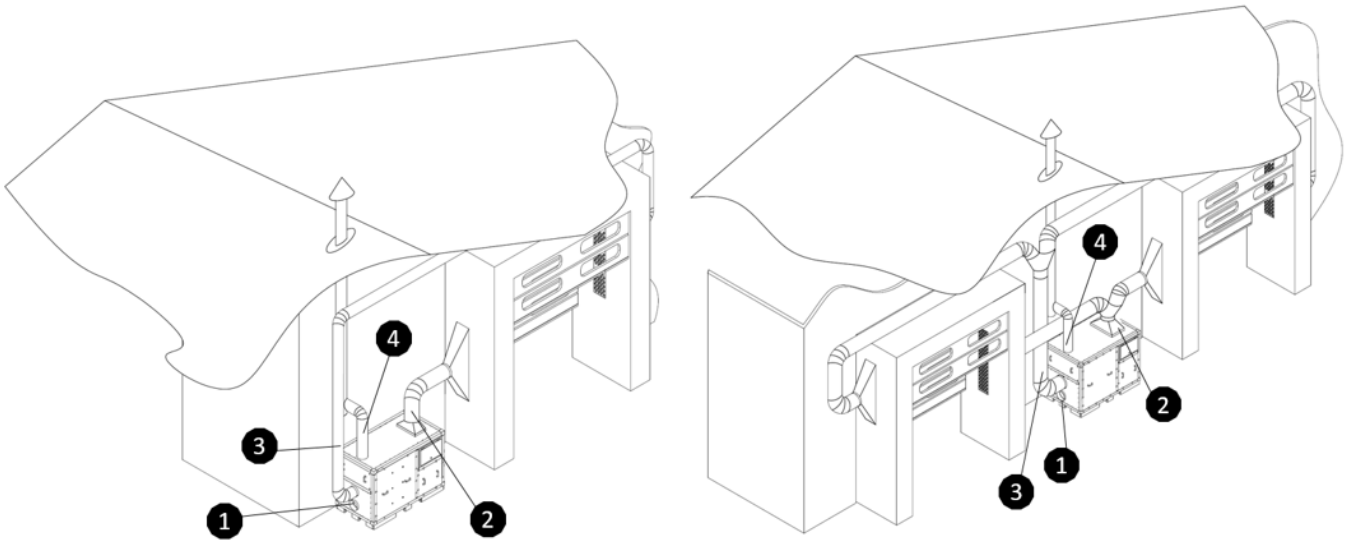

1. Process air intake
2. Dry air duct
3. Reactivation air intake duct
4. Wet air duct

7.3 Connection to the mains power supply

Attention:

- This equipment operates at high electrical power and voltage, so it must be connected to the mains power supply by qualified personnel in accordance with local Electrical Standards and Regulations.
- Before doing anything with the unit's electrical board, check that all moving parts are working freely.
- The unit must be connected to the mains power supply of the installation using a power line protected against short-circuits and grounded to earth, with the cross-section and sensitivity required for each model's power rating.
- All of the values displayed on the rating plate must be checked carefully to ensure that the unit is correctly protected and connected (this plate is located inside the control and protection panel).
- The power voltage must be three-phase and must be between 380V and 415V to operate at a frequency of 50Hz or 60Hz. For other types of connections contact the manufacturer.

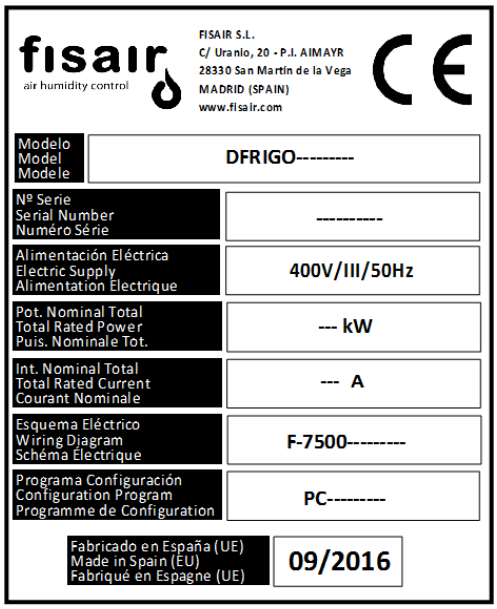

Figure 8: Rating plate displaying the electric board's values.

8. Handling and control.

8.1 Introduction

The advanced PLR (Programmable Logic Relay/Controller) control fitted to this type of equipment is a programmable device for the real-time configuration, adjustment and supervision of the various components that make up the unit and those that are connected to it. The unit's operations can be viewed on the on-board display or remotely.

Integration of the PLR into the management and operational supervision systems of the unit, makes it possible to achieve faster, simpler, more precise and reliable operation of the dehumidifier, as well as reducing the wiring needed for the electrical board.

The unit's built-in automatic program has been designed so that both its execution as well as the actions and/or reactions that are produced in the machine and its surroundings do not affect the degree of safety and functionality for which it has been designed. The combination of this dehumidifier with this IT program will ensure that it can be brought online more quickly.

Deleting and/or modifying the said program contained in the PLR, run from the onboard display or from an online PC, will modify the terms and conditions of the guarantee, as well as affecting compliance with the explicit directives and standards that cover its manufacture. The installer, handler or user shall therefore bear full responsibility for any repercussions arising from the unit's modified functionality.

The programming of this device does not include safety measures to cover personal injury. For this purpose, a series of passive safety measures are installed, such as bars, covers, seals, etc.

*In the event of a malfunction, the machine must be isolated from the mains power supply by **I1** and the technical services department should be notified immediately.*

8.2 PLR control panel and navigation keyboard.

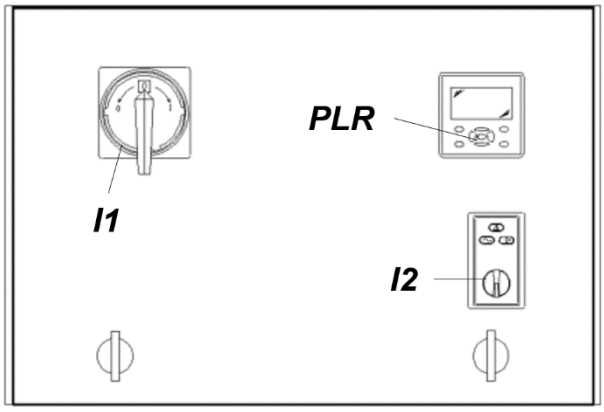

I1. Cut-off switch.

I2. MANual / or / AUTOmatic selection toggle

PLR. Programmable logic relay with backlit, black-and-white LCD screen measuring 63x32mm and a navigation keyboard with the following functions:

KEY	OPERATION / DESCRIPTION
DEL	Function that will depend on the particular configuration. Where applicable, this will be explained in the relevant section. The screen brightness can be increased from the start display.
ESC	Function that will depend on the particular configuration. Where applicable, this will be explained in the relevant section. The screen brightness can be reduced from the start display. This allows you to return from a sub-status to start display screen
∨ ∧ ‹ ›	Navigation keys for moving the cursor horizontally or vertically and/or changing the sub-status. Modify the numerical data that needs to be adjusted.

OK	Numerical and/or selection validation function.
*	Function that will depend on the particular configuration. Where applicable, this will be explained in the relevant section. On the main screen this enables you to enter the active connections status. To exit this status, press this key again.
ALT	Function that will depend on the particular configuration. Where applicable, this will be explained in the relevant section.

8.3 Modes of Operation

The unit's drying capacity is controlled by managing the reactivation battery BR. (See installation and maintenance manual) The unit can operate in two different modes in which the reactivation battery BR power output is managed in different ways.

These modes operate as follows:

8.3.1 Manual mode

If manual mode (MAN) is selected, the fan motors, speed reducer motor that turns the rotor and the reactivation battery will start up immediately at 100% of their power output.

8.3.2 Automatic mode

In automatic mode (AUTO) the start-up of the fan motors and the speed reducer motor depends on the H1 interlock and the operation of the reactivation battery is dependent on the configuration of the control and interlock H2.

There are three control configuration types for the operational management of the reactivation battery RB.

- **Configuration by stages "S"**

By means of two external digital signals, the reactivation battery is controlled with two interlocks: H2 and H3. Each stage delivers an adjustable percentage of power.

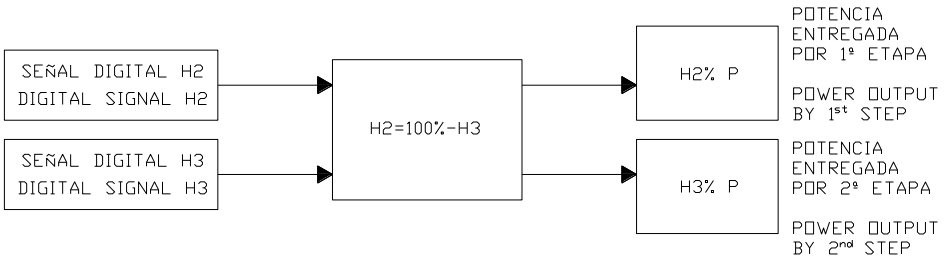

P	0%	%	%	100%
H2				
H3				

❖ Functionalities of the Hn interlocks in configuration by stages "S".

- Interlock H1 (Terminals 42-46): ON/OFF remote ventilation and rotor connection.
- Interlock H2 (Terminals 42-47): Connection of the BR first phase Requires connection H1.
- Interlock H3 (Terminals 42-51) Connection of the BR second phase

- **Proportional Configuration “P”:**

By means of an externally regulated analogue signal, 0...10Vcc, from a humidity controller/regulator, a power output of 0...100% is obtained, supplied by the reactivation battery BR.

This signal must be connected to the terminals (-) -51.

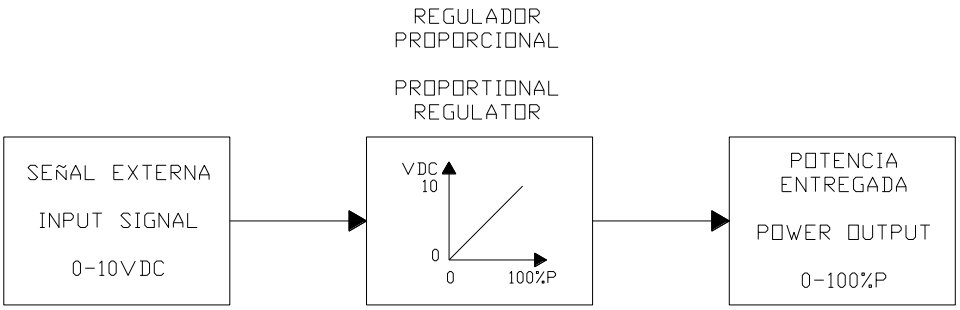

❖ Functionalities of the Hn interlocks in proportional configuration "P".

- Interlock H1 (Terminals 42-46): ON/OFF remote ventilation and rotor connection.
- Interlock H2 (Terminals 42-47): Reactivation battery ON/OFF connection.
  Requires connection H1.
- Interlock H3 (Terminals 42-51): Not applicable in configuration "P".

- **Configuration by Measurement signal "M":**

If you wish to work in signal measurement configuration you must select the probe to connect to from the configuration menu.

a) By means of a humidity probe BH1 (0..10Vcc / 0..100%RH)

The PLR regulates the power delivered by the reactivation battery BR to reach the established set point.

The BH1 probe must be connected to the X1 terminals. (-)-52. (See page 6 of the electrical schematic F-7500-X-031-XXX)

The relative humidity setpoint RH required and the percentage for the maximum permitted humidity alarm are entered in the adjustments menu (AJUS) in the value RH.

The humidity alarm will be visible, and will flash on the main screen, when the value measured by the BH1 probe is higher than the sum total of the setpoint and the humidity alarm.

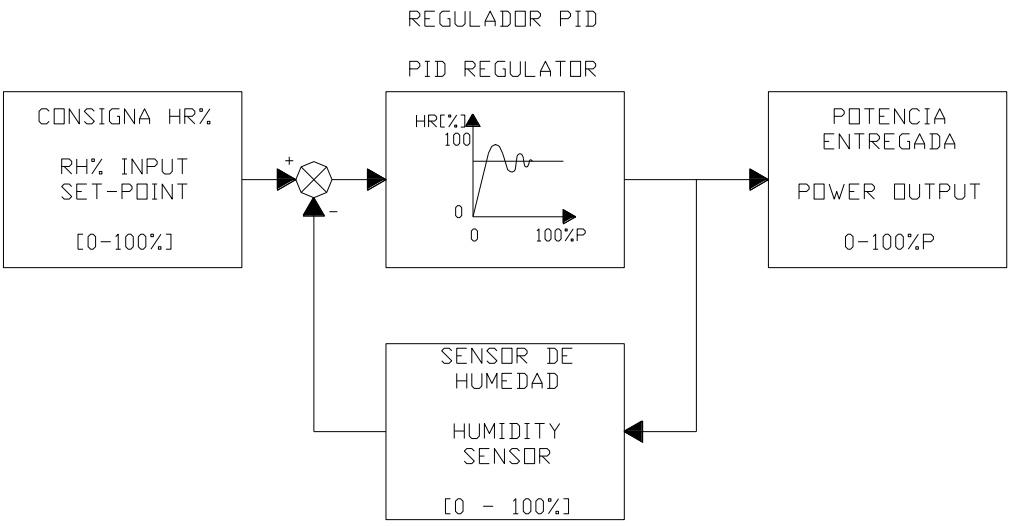

b) By means of a dew point probe DpT (4..20mA / -40°C…+20°C)

The PLR regulates the power delivered by the reactivation battery RB to obtain the adjusted setpoint.

The DpT probe must be connected to the X1 terminals. (+)-48-(+). (See page 6 of the electrical schematic F-7500-X-021-XXX)

The dew point setpoint DpT required and the maximum permitted dew point alarm are entered in the adjustments menu (AJUS) in the value DpT.

The dew point alarm will be visible, and will flash on the main screen, when the value measured by the DpT probe is higher than the sum total of the setpoint and the dew point alarm.

The control loop is the same as if a relative humidity probe is used.

❖ Functionalities of the Hn interlocks in proportional configuration "P".

- Interlock H1 (Terminals 42-46): ON/OFF remote ventilation and rotor connection.
- Interlock H2 (Terminals 42-47): Reactivation battery BR ON/OFF connection. Requires connection H1.
- Interlock H3 (Terminals 42-51): Not applicable in configuration "M".

8.4 Initial state

Having fulfilled the conditions for installation, checked that the network values match those required for the machine and having made all of the electrical connections in accordance with the control application:

Switch on isolator (I1), and the following will appear on the control panel:

Initial state OK.

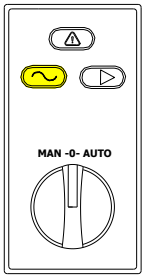

Signalling card SEF-008

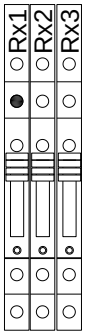

Remote signalling card SEF-013

Initial state NOT OK.

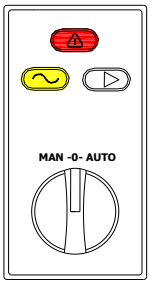

Signalling card SEF-008

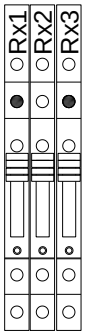

Remote signalling card SEF-013

On the signalling card SEF-008 lights up yellow, indicating that the unit is "live".

If there is any alarm/defect/fault in the unit, will also light up red, indicating “warning”.

When the unit is switched on, 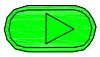 lights up green, which indicates that the unit is “running”.

WARNING!!! Do not switch on the unit without first reading sections 8.5 and 8.6.

The unit has a remote signalling card SEF-013 with three relays (NC-NA) with which can be obtained these remote status signals. This card is located inside the unit's electrical board, in connection block X1.

Rx1. Remote relay indicating "unit is live"

Rx2. Remote relay indicating "running"

Rx3. Remote relay indicating "defect/alarm"

For information about your electrical connection see page 7 of the electrical schematics.

8.5 Configuration menu

If you have chosen to operate in automatic mode, you must select one of the three pre-set configurations for operating the dehumidifier from the configuration menu (CONF).

	For detailed information on the configurations. see section 8.3.
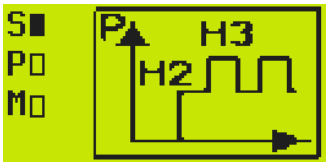	Selection of "S" stages configuration
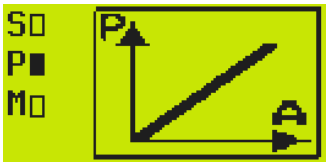	Selection of "P" proportional configuration
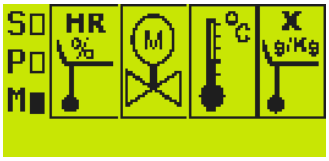	Selection of configuration by measurement signal "M”

	From the previous screen (configuration selection) if you press you will access the chrono-thermostat screen. This enables you to program the unit to switch on automatically at certain times. This function is activated/deactivated by pressing the vertical cursor keys. - Press "OK" to open the value selection. - Use the "up" and "down" keys to position the cursor over the value you want to change. - Press "OK" to open the value. - Use the "up" and "down" keys to change the value. - Press "OK" to validate. - Press "ESC" to exit the selection/modification. - √= Enable/disable chrono-thermostat. - Day up = start of weekly period. - Day down = end of weekly period. - Time up = switch-on time. - Time down = switch-off time.
	From the chrono-thermostat screen, if you press , you will access this screen. A password must be entered for this screen to change the probe if you are going to work in measure signal "M" configuration. PASSWORD 07500
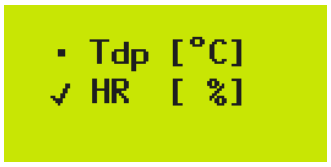	Select: ✓ DpT [°C] if you intend to switch on a dew point probe. ✓ RH [%] if you intend to switch on a relative humidity probe.

8.6 Adjustments menu

In the adjustments menu (AJUS) you must enter the required setpoint values according to the operating mode and configuration selected.

	In this menu, the configuration setpoints and additional batteries are adjusted. Press OK to enter the menu. Using the keys > and < you can navigate through the menu screens. Press OK if you want to change a setpoint. When the digit flashes, adjust its value with the keys ^ and v ; you can return to this screen with the ESC key.
	Apply in "S" stages configuration The H2 and H3 interlocks control the reactivation battery in two stages. In H3 the desired percentage of power of the second stage is adjusted, therefore, the percentage of the first stage is: H2(100%) minus H3 (%) = 1st stage %
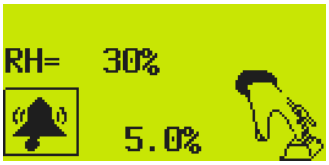 	**Apply in measurement signal configuration "M":** **a) If you have selected the RH [%] adjustment menu** Adjust the desired relative humidity setpoint between 0% and 100%. The second figure is a maximum humidity alert. **b)** The alarm is triggered when the value measured by the humidity probe SH1 is higher than the sum total of the humidity setpoint and the differential margin for the maximum humidity alarm. **c) If you have selected theTdp [°C] adjustment menu** Adjust the desired dew point between -40°C and +20°C The second figure is a maximum humidity alert. The alarm is triggered when the value measured by the dew point probe is higher than the sum total of the dew point setpoint and the humidity alarm.

8.7 Launching

Once the main isolator I1 is switched on, the setpoints have been entered in the adjustments menu and the configuration has been selected (in AUTO mode only), toggle the I2 switch to the required position.

8.7.1 Manual mode selection

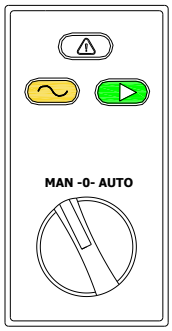	For detailed information on operation in manual mode. See section 8.3.1.

8.7.2 Automatic mode selection

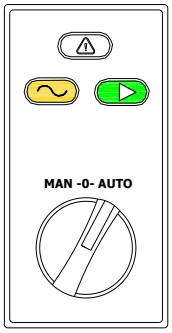	For detailed information on operation in automatic mode. See section 8.3.2.

8.8 Stop

To stop the unit manually, set the switch I2 to the position 0.

The PLR is programmed to include a 2 minutes shut-down delay on the reactivation fan and the speed reducer motor to dissipate the heat from the reactivation battery, preventing it's thermostatic protection from being triggered or any overheating due to radiation.

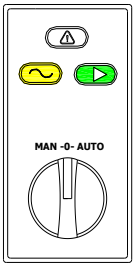	The reactivation fan and the rotor will continue to work for 2 more minutes to dissipate the heat.	

8.9 Emergency stop

In the case of a serious defect that could cause personal injuries or irreparable damage to the unit, the electric power supply must be cut off using the cut-off switch I1.

WARNING!!! Under no circumstances must the I1 cut-off switch be used for a controlled shut-down. This could damage components and affect programming.

It should be considered that the 2 minute delay of the fan shut-down and speed reducer motor are eliminated along with cooling of the unit.

8.10 Supervision menu

	Menu displays the operation of the main components, the temperature and humidity values and the unit's incidents or alarms on the main screen. Press OK to access
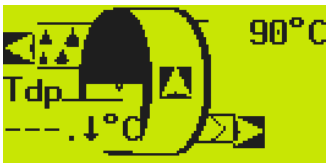 	This is the main pre-set screen. It activates automatically after 60 seconds have elapsed. The flashing arrows indicate the operation of the process (dry air) fan motor, the rotor motor (rotor turning) and of the reactivation fan motor (wet air). The reactivation battery temperature measured by the ST1 probe appears in the top right corner of the screen. In the event of an incident or alert in the unit, a warning triangle will appear, followed by the name or number of the alert. For the alarm origin and the recommended action, see section "List of equipment alarms". In the "M" measurement signal configuration, the value measured by the relative humidity probe will also be shown on the main screen. If the value measured by the probe is higher than the sum total of the set point and the alarm entered in the adjustments menu, an alarm bell icon will flash on the screen (maximum humidity alert).

	With the key navigate to the right of the main screen: Displayed on this screen are: the temperature measured by the BT3 probe, if it is switched on, and, if automatic mode has been selected, the percentage of power supplied by the reactivation battery BR. If manual mode has been selected, the percentage will not appear, as it is always 100%.
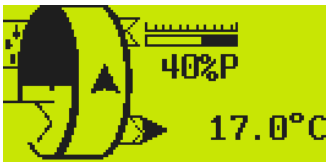	On the next screen, as well as the percentage of power supplied by the reactivation battery, the temperature measured by the BT4 probe will be displayed.
	This screen displays the status of the H1, H2 and H3 interlocks. If proportional configuration has been selected, the value of the external analogue signal A1 can be displayed on the screen (0..10Vdc) QA1 is the value of the analogue output (0..10Vdc) of the PLR for the control of the solid-state relay that controls the power delivered by the reactivation battery RB.
	On the last screen are displayed the differential pressure values necessary for calculating the air flow of the fans. BQ1 to calculate the dry air flow BQ2 to calculate the reactivation/wet air flow See section 6.3 for the flow formulation.

8.11 Information menu.

The information menu (INF) records the number of hours of operation of the main components to assist with maintenance guidelines.

M1: Process air fan motor.

M2: Reactivation air fan motor.

M3: Rotor spin speed reducer motor.

BR: Reactivation battery

These values cannot be re-set.

8.12 PLR connections status

Real-time information menu showing the PLR digital inputs and outputs. The electrical schematics and these screens are very useful for troubleshooting and resolving problems.

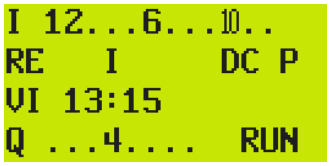

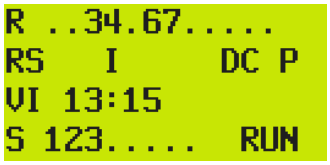

Clicking on from any screen will access the menu “Connections status”, which shows the status of the inputs I, R and outputs Q, S in real time, the day of the week, time, and program status (RUN or STOP)

To leave this menu and return to the application screen, click on

9. List of alerts.

Alert	Component involved	Possible causes	Recommended actions
Δ BT1	Temperature probe BT1	Incorrect configuration or connection of the converter, BT1 probe damaged or incorrect connection.	Check connections and if necessary replace components.
Δ 01	BP1 process air filter pressure switch	Dirty/blocked filter.	Clean or replace filter.
Δ 04	BP2 reactivation air filter pressure switch	Dirty/blocked filter.	Clean or replace filter.
Δ 05	Protections: U1, U2, FK1, FK2	Circuit breaker tripped	Check motor currents and resistances with the fuse/MCB rating
Δ 06	rotor rotation sensor	Rotor rotation sensor damaged; rotor motor damaged; bad connection or fuses/condensers blown; tightening belt broken or slipping.	Check that the rotor is turning, check the proximity of the rotor rotation sensor, check rotor motor, fuses and capacitor.
Δ 09	Differential pressure sensor BQ2	Reactivation air flow too low.	Check air flow and components involved in reactivation zone (fan, dampers, filters. etc.).
Δ 12	Fault in the process/dry air fan	This comes from the EC process/dry air fan motor electronics.	Check the free rotation, connection, current: switch off for 1 minute. Switch on again and if the fault recurs contact SAT.
Δ 13	Fault in the reactivation/wet air fan	This comes from the EC reactivation/wet air fan motor electronics.	Check the free rotation, connection, current: switch off for 1 minute. Switch on again and if the fault recurs contact SAT.

Δ 18	Solid state relay SSR operation thermostat.	Overheating of the SSR due to inadequate ventilation. Dissipating fins obstructed, failure of the M4 motor or another obstruction.	Check that the M4 motor is running normally. Check the ventilation of the relay by the dissipating fins and the M4 motor. To deactivate the alarm press
Δ 19	Contacts or temperature probe BT1	Electro-mechanical fault of the contacts FK1 and FK2 or maximum reactivation temperature exceeded (110ºC).	Check the contacts are working. Check the reactivation air flow is working correctly to dissipate air.
Δ 114	PLR modules	Problem with the communication and/or connection of the PLR modules.	Check the part and connection pins among the modules Check the power to modules.
Δ 115	Fault in PLR outlets Q1 to Q4	Short-circuit or overload in PLR Q outlet.	Check the components connected to the outlet or replace the unit.
Δ 116	Fault in PLR outlets Q5 to Q8	Short-circuit or overload in PLR Q outlet.	Check the components connected to the outlet or replace the unit.
Δ 26	Solid-state relay SSR2 of the post-heating battery	SSR2 relay not available.	Check the circuit protection of the relay F2

10. Maintenance.

The following service table is for guidance only, as the frequency will depend on the conditions of each installation.

ACTION	FREQUENCY
Cleaning the filters	According to the dehumidifier's instructions.
Inspection of the wet air fan impeller (reactivation)	Every 1,500 hours of operation
Inspection of the dry air fan impeller (process)	Every 1,500 hours of operation
Internal inspection (desiccant rotor surfaces, tension belt, presence of foreign bodies, etc.)	Every 8900 hours of operation
Desiccant rotor inspection	Every 1500 hours of operation
Electrical connections	Every 2 months
Static exchanger inspection (plates)	Every 1,500 hours of operation

10.1 Corrective maintenance

The FISAIR desiccant rotor dehumidifier is a highly reliable piece of equipment, and so does not require very demanding corrective maintenance.

The motors used by the unit may require repair/replacement due to mechanical or electrical malfunctions. It is not within the scope of this manual to cover these, as any suitably qualified maintenance technician will have sufficient knowledge to deal with this.

The electrical reactivation battery may need to be repaired or replaced in the long term, as will any conventional air heating component.

The filters will have to be replaced or cleaned regularly in order that the unit's performance and power consumption are not impaired.

Minor components such as the rotor drive belt and electrical board components may need to be replaced in the long term. It is the customer’s decision whether or not it is more convenient to keep a store of replacement parts, depending on the lead time to procure them from distributors.

10.2 Maintaining the desiccant rotor

The desiccant rotor is the only component of the dehumidifier that needs special attention.

The desiccant rotor fitted to these units does not require specific ongoing maintenance. The speed of rotation is very slow, and the bearings and desiccant material are designed for continuous operation. It is however very important to check the drive system on a regular basis to ensure it is working correctly, as this has a direct impact on the air-drying process.

The main constituent in the process of water vapour adsorption (silica gel) traps the water vapour molecules inside the tiny pores (micropores and mesopores) on the rotor surface in the process air circuit and releases them into the reactivation air circuit.

The operating process is not affected by normal ambient conditions as the rotor is made from inert fireproof material. Only the presence of organic compounds with a molecular size similar to that of water can affect the unit's drying capacity. It is therefore important to clean it on a regular basis.

Procedure for washing the silica gel desiccant rotor

The desiccant rotor fitted to the unit has the advantage over a hygroscopic salt desiccant rotor (Lithium Chloride) that it can be washed with water.
Normally, ordinary dust particles must be removed with a vacuum cleaner when necessary. The frequency of cleaning will depend on the type of installation and workload to which the dehumidifier is subjected.
In cases where the vacuum cleaning is insufficient to eliminate dust and dirt, the rotor can be rinsed with water following these steps:

1) Remove the rotor from the dehumidifier. Disassemble its drive shaft and bearings, which must be reinserted in their original position after they have been washed.
2) Prepare water in a container that is large enough to immerse the rotor in for washing and prepare the rotor so that it can be immersed by moving it vertically downwards.
3) Immerse and remove the rotor from the water tank two or three times. Let the water run off completely while it is held in a raised position so that any materials that have been dissolved in the water are removed.
4) Once this process is complete, blow the rotor channels with compressed air to expel any remaining water on the rotor.
5) Return the rotor to its position in the dehumidifier, securing its drive shaft, bearings, and sealing joints.
6) Turn the rotor and dry it with the fans without switching on the reactivation heater for approximately 30 minutes.
7) Complete the rotor drying process by switching on the reactivation heater.

10.3 Maintaining the air filters.

The standard DFRIGO dehumidifier has two air filters, one to filter the reactivation air intake and the other to filter the process air. (see section 4.3 "Main mechanical components" to identify the position of the filters).

It is important to keep both filters clean (either by washing them correctly or by replacing them), since dirty filters will affect the dehumidifier's performance.

Follow these steps when cleaning or replacing the filters:

1) Turn off the dehumidifier and wait for it to cool down.
2) Extract the filters from the unit.
3) Wash the filters using neutral pH soap and water or replace them.
4) Only replace the filters when they are completely dry.

Always use FISAIR filters or filters with equivalent properties.

11. Troubleshooting

The DFRIGO dehumidifier has an integrated fault information system in the unit's PLR. You can consult the fault codes directly on the machine's display screen.

For more information, see section 9: “List of Alerts" in this manual.

If a fault should occur, note down the fault code indicated on the unit's display and switch off the dehumidifier immediately using the on/off switch **I2**.

Faults must be resolved exclusively by qualified personnel in accordance with the safety instructions.

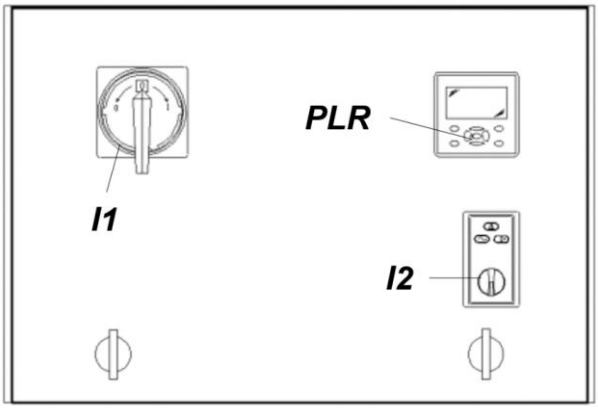

12. Declaration of compliance

DECLARACIÓN CE DE CONFORMIDAD
EC CONFORMITY DECLARATION
EG KONFORMITÄTSERKLÄRUNG
DECLARATION CE DE CONFORMITÉ

Departamento de Dirección de Calidad
Quality Management Department

Qualitätsmanagement-Abteilung
Département de gestion de la qualité

FISAIR S.L.U.
C/ Uranio, 20 (Pol. Ind. Aimayr)
28330 San Martín de la Vega (Madrid) SPAIN
Tel.: (+34) 916921514
info@fisair.com

La presente declaración de conformidad se expide bajo exclusiva responsabilidad del fabricante.
This declaration of conformity is issued under the sole responsability of the manufacturer.
Diese konformitätserklärung wird in der alleinigen verantwortung des herstellers ausgestellt.
Cette déclaration de conformité est délivrée sous la seule responsabilité du fabricant.

Descripción/ Product description/ Produktbeschreibung/ Description du produit: **DFRIGO**

Tipo de máquina/ Machine type/ Maschinetyp/ Type de machine: **MÁQUINA/ MACHINE/ MASCHINE/ MACHINE**

Marca/ Brand/ Marke/ Marque: **FISAIR**

Es conforme con la legislación de armonización pertinente a la unión europea:
It complies with the harmonization legislation relevant to the European Union:
Es entspricht den für die Europäische Union relevanten Harmonisierungsgesetzen

2006/42/CE
2014/30/UE
2014/35/UE

Es conforme con las siguientes normas:
It complies with the following standards:
Es entspricht den folgenden Normen:
Il est conforme aux normes suivantes:

UNE-EN ISO 12.100:2012
UNE-EN 60204-2:2019
UNE-EN 61000-6-6:2012
UNE-EN 61000-6-3:2012

FISAIR se exime de cualquier responsabilidad a menos que se cumplan con todas las instrucciones de instalación y funcionamiento proporcionadas por FISAIR, o si los productos han sido modificados o alterados sin el consentimiento por escrito de FISAIR, o si tales productos han sido sometidos a un mal uso, mala manipulación, alteración, mantenimiento inadecuado o muestran consecuencias de accidente o utilización negligente.
FISAIR disclaims any liability unless all installation and operating instructions provided by FISAIR are followed, or if products have been modified or altered without FISAIR's written consent, or if such products have been subjected to misuse. use, mishandling, alteration, improper maintenance or show consequences of accident or negligent use.

Con exclusión de responsabilidades sobre las partes o componentes adicionados o montados por el cliente.
With no liability for the parts or components added or assembled by the customer.
Unter Ausschluß der Verantwortung über die vom Kunden bereitgestellten und/oder angebauten Teile.
Avec exclusion des responsabilités concernant les parties ou les composants ajoutés ou assemblés par le.

Hugo J. López Álvarez
-Quality Manager-
San Martín de la Vega, junio 2020

Rev01

13. Guarantee

FISAIR S.L.U. WARRANTY POLICY

Quality Department
Departamento de Calidad

FISAIR S.L.U.
C/ Uranio, 20 (Pol. Ind. Aimayr)
28330 San Martín de la Vega (Madrid) SPAIN
Tfº (34) 916921514
Fax (34) 916916456

Two-year Limited Warranty

FISAIR warrants to the original purchaser that its products will be free from defects in materials and parts for a period of two (2) years after installation or twenty-seven (27) months from the date FISAIR ships such product, whichever date is the earlier.

If any FISAIR product is found to be defective in material or assembly during the applicable warranty period, FISAIR's entire liability, and the purchaser's sole and exclusive remedy, shall be the repair or replacement of the defective product or part.

Warranty disclaimer

FISAIR shall not be liable for any costs or expenses, whether direct or indirect, associated with the installation, removal or reinstallation of any defective product.

The Limited Warranty does not include any consumer part such as joints, pulleys, filters or media.

FISAIR's Limited Warranty shall not be effective or actionable if:

a) All related product invoices have been payed in time and terms.
b) Unless there is compliance with all installation and operating instructions furnished by FISAIR, or if the products have been modified or altered without the written consent of FISAIR, or if such products have been subject to accident, misuse, mishandling, tampering, negligence or improper maintenance. Such situations could be an incorrect power supply connection, crashed with inappropriate objects, security protection devices unblocked and so.
c) Components and/or manufactures are affected or damaged by the effects of corrosion (gradual wear of the metal bodies by the action of external actors not controlled by FISAIR).

Any warranty claim must be submitted to FISAIR in writing within the stated warranty period.

Parts Warranty

Defective parts may be required to be returned to FISAIR. In case any part is claimed as a faulty one, FISAIR will ask the customer to send the part back to the factory in order to analyze if the part is failing due to any of above referred actions (see warranty disclaimer) or due to effective part failing.

If the part must be replaced immediately, FISAIR will ship the part to the customer immediately and invoice the part with a 30 days delay payment for the faulty part to be returned. If the part is returned in this period, the part fail analysis would be made to emit a technical report for the warranty coverage based in this Warranty Statement document.

In case that the part is failing due to a lack of quality, FISAIR will credit this invoice in order to stop the payment. In case FISAIR does not receive the part in this period, or if the failure is due to the reasons covered in the Warranty disclaimer paragraph, the invoice will be effective.

In case any part from the product / shipment is missing, the customer should notify FISAIR before 3 days from the shipment date of arrival.

1/2

FISAIR S.L.U. WARRANTY POLICY

Quality Department
Departamento de Calidad

Service Covered by Warranty

In case that there is any FISAIR product that should be serviced in order to recover its proper used designed, FISAIR will select the person (s) in charge of this operation. These qualified technicians should have the enough knowledge to service FISAIR units.

No company should practice a warranty service without the writing FISAIR notice giving the authorization to do it and if any cost should be cover by FISAIR should be advised in advance to the service job. In case that FISAIR should send FISAIR staff to solve the solution, trip expenses are not covered by the warranty.

FISAIR's Limited Warranty is made in lieu of, and FISAIR disclaims all other warranties, whether express or implied, including but not limited to any implied warranty of merchantability, any implied warranty of fitness for a particular purpose, any implied warranty arising out of a course of dealing or of performance, custom or usage of trade.

FISAIR shall not, under any circumstances be liable for any direct, indirect, incidental, special or consequential damages (including, but not limited to, loss of profits, revenue or business) or damage or injury to persons or property in any way related to the manufacture or the use of its products. The exclusion applies regardless of whether such damages are sought based on breach of warranty, breach of contract, negligence, strict liability in tort, or any other legal theory, even if FISAIR has notice of the possibility of such damages.

By purchasing FISAIR's products, the purchaser agrees to the terms and conditions of this Limited Warranty.

Extended Warranty

The original user may extend the term of the FISAIR Limited Warranty for a limited number of months past the initial applicable warranty period and term provided in the first paragraph of this Limited Warranty. All the terms and conditions of the Limited Warranty during the initial applicable warranty period and term shall apply during any extended term.

Each case should be valued in terms of type of product, equipment application, use and location of the product operation site.

Any extension of the Limited Warranty under this program must be in writing, signed by FISAIR, and paid for in full by the purchaser.

Quality Manager:

Hugo J. López Álvarez
San Martín de la Vega, February 2016

2/2