Installation and maintenance manual

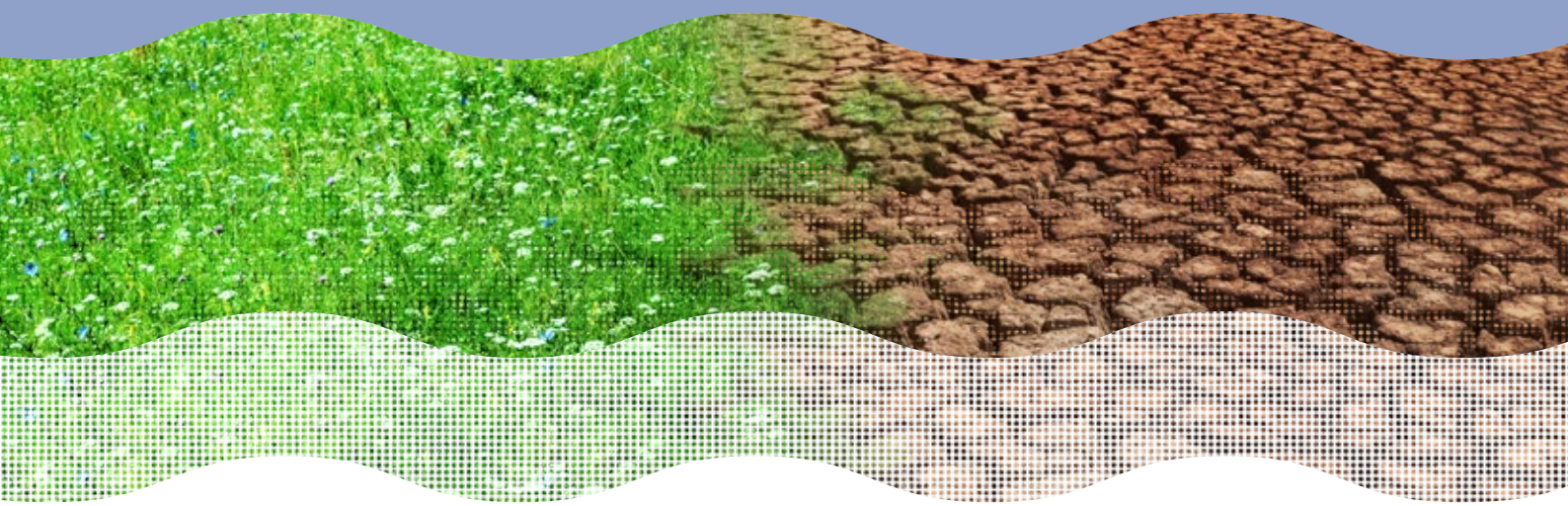

HEF7

Adiabatic Cooling System for Air-condensed Water Chillers

In compliance with European Union standards for machinery safety, it is essential to read this manual in detail before installing units.

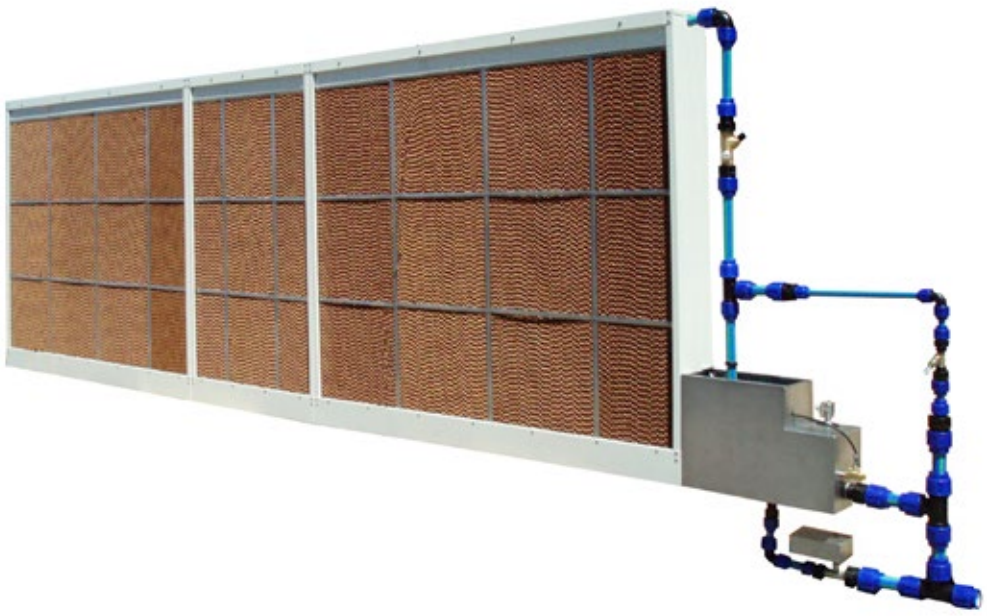

fisair
air humidity control

MHEF7-EN-20-0

HEF7

Installation and maintenance manual

Contents

04 General description

05 HEF7 nomenclature

06 High efficiency HEF7 evaporative panel

- **06** ORGANIC evaporative panel
- **07** INORGANIC evaporative panel

08 Unit components

10 Operating principles

11 Installation requirements

12 Connections and regulation

13 Recirculation pump electricity connection

14 Level detector electricity connection

16 Solenoid valve electricity connection

17 Draining motor-valve electricity connection

20 Setting the valve regulating irrigation flow

21 Setting the valve regulating the bleed-off flow

22 Maintenance and cleaning

24 CE declaration of conformity

25 FISAIR S.L. guarantee policy

General description

EVAPORATIVE HUMIDIFIER OPERATING PRINCIPLE

FISAIR evaporative humidifier units are designed to increase the water vapour content of the treated air, through the natural evaporation of water in its liquid phase. The air flow being treated passes through a cellular panel, which is watered by an irrigation system. The panel is made up of undulating sheets of organic or inorganic paper containing stiffening agents and water absorbers.

Panels are laid out in criss-crossing channels to provide a large surface area for air-water contact, which maximizes water evaporation and at the same time minimizes resistance to the air flow passing through (pressure drop). See the graph of evaporative performance and pressure drop for the panel in relation to the air speed (pages 6 and 7).

FISAIR evaporative humidifiers work in a similar way to natural phenomena occurring in rivers, lakes and seas. All that is added to the air is pure water vapour.

PROVISIONAL STORAGE

During storage, keep units dry and protected against the elements.

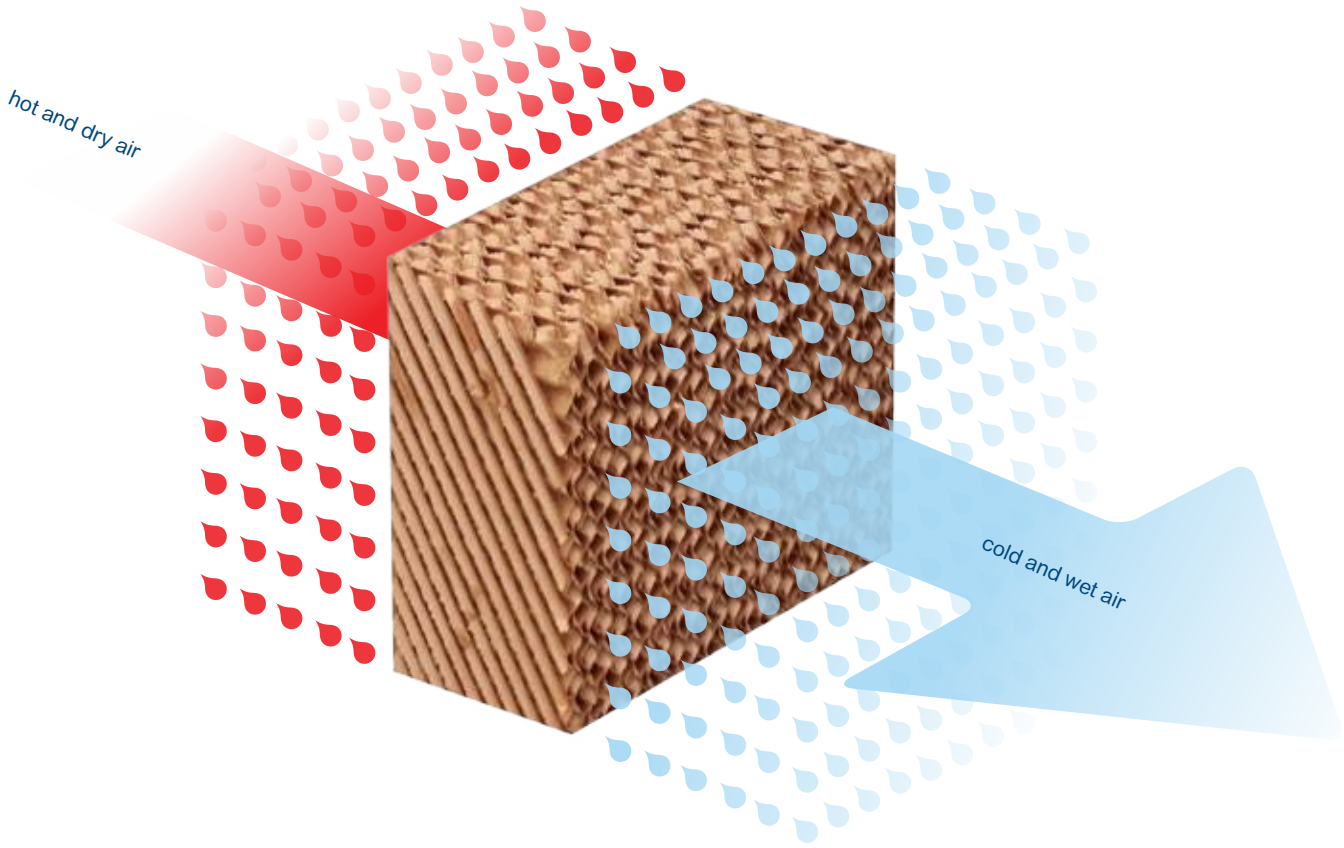

HEF7 nomenclature

HEF7 NOMENCLATURE

	HEF	- 7 -	00 -	000 -	000 -	N

QUANTITY

HUMIDIFIER

EVAPORATIVE

FISAIR

SERIES

Nº OF COVERED FANS
01
02
03
04

FAN Ø

CASSETTE THICKNESS (MM)

PANEL MATERIAL

0 (Organic)

I (Inorganic)

PUMPING SYSTEM FOR HEF7

	GB7-	230V-IN-50/60Hz

Line voltage

C.P.M. (Control panel and protection) / (CONTROL PANEL)

	CPM-	230V-IN-50/60Hz

Line voltage

High efficiency HEF7 evaporative panel

ORGANIC EVAPORATIVE PANEL

- **Maximum performance: Organic Media** is designed to provide the largest possible air-to-water contact surface area (approximately 460 m2/m3). Such a large area enables optimal evaporative cooling and humidification from the evaporation.
- **Maximum freshness:** it works as a natural filter purifying the entry air. Carefully designed channelling eliminates dust particles and mineral deposits from the air, which are trapped on the evaporative surface.
- **Maximum durability:** made from special cellulose paper impregnated with insoluble chemical components in order to ensure a long working life in the system.
- **Maximum resistance:** appropriate bleed-off and regular brushing make it possible to be used in imperfect water and air conditions.

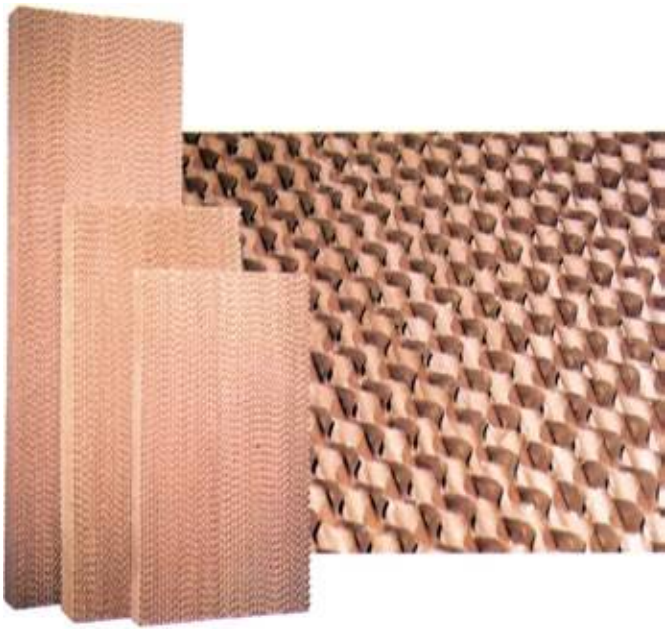

TYPE 0760

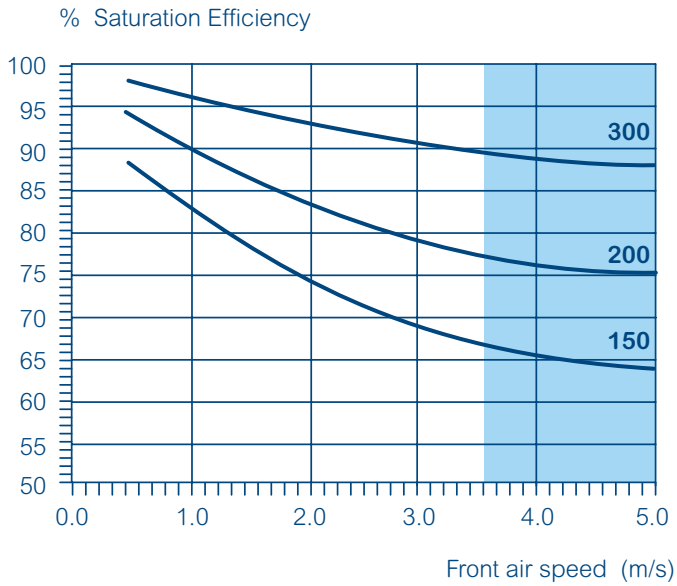

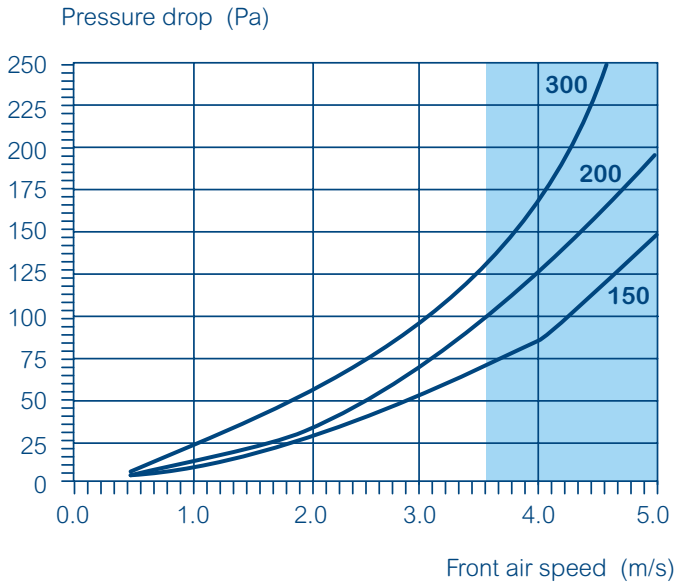

[Note]

Air speeds in the shaded zone can cause droplet carry-over.

INORGANIC EVAPORATIVE PANEL

These panels are made of fibreglass with a special coating to enable a greater absorption capacity and ensure constant evaporative humidification and cooling, even at high air speeds. They are made of fireproof inorganic material. They are ideal for humidifiers placed after air treatment and heater units, and for the pre-cooling of gas turbines.

- **Inorganic and fireproof (in accordance with EURO Class A2, S1, D0)**
- **Low humidification/cooling energy costs**
- **Precise control**
- **No risk of oversaturation**
- **No need for water treatment**
- **Safe and hygienic**

TYPE 0760

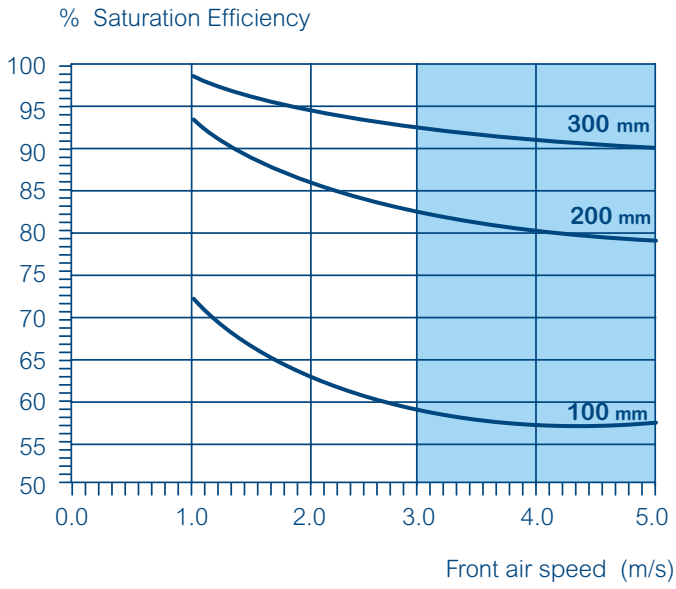

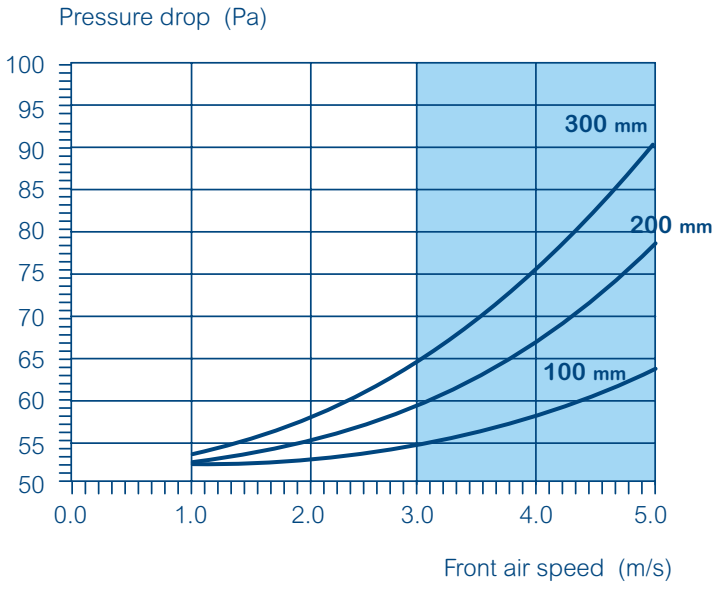

[Note]

Air speeds in the shaded zone can cause droplet carry-over.

Unit components

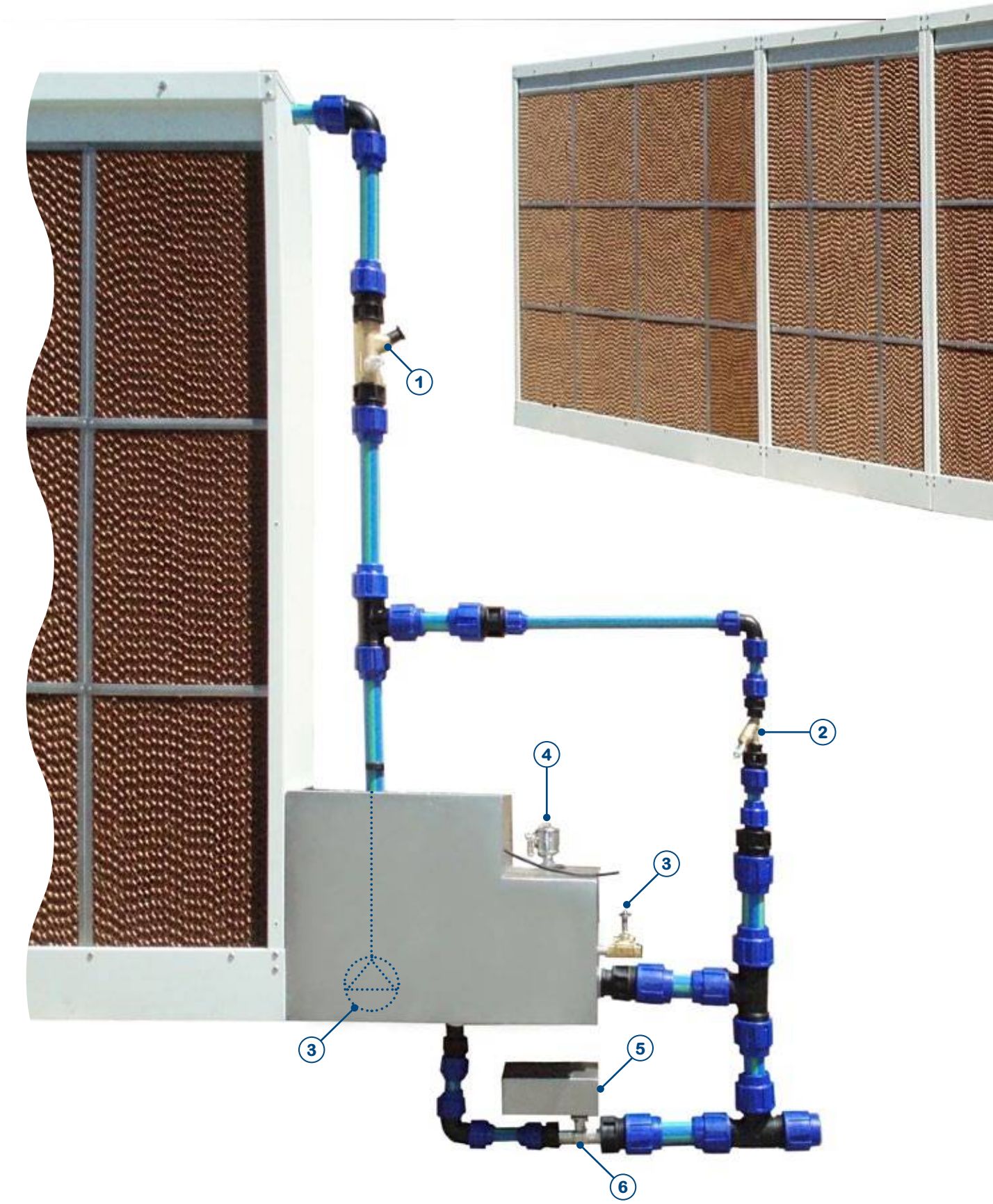

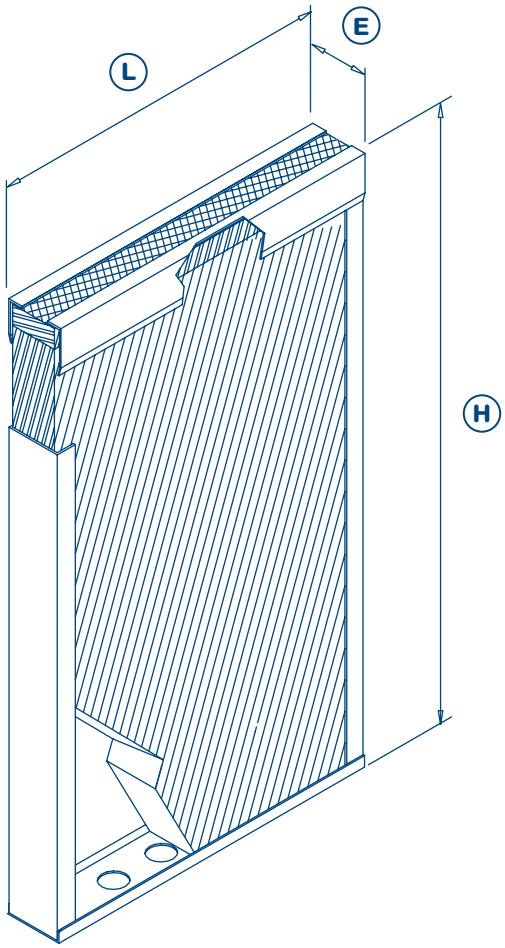

The unit serial number and the dimensions of the cassette are required for evaporate cassette spare parts.

L = Cassette length **H** = Cassette height **E** = Cassette thickness

For further information on parts of systems, please contact the manufacturer.

Brand	Code	Description	Units
1	62000080	REGULATION VALVE	1
2	62000075	REGULATION VALVE	1
3	71090006	SOLENOID VALVE	1
4	64220314	LEVEL SENSOR	1
5	63390013	VALVE ACTUATOR	1
6	63330015	2-WAY VALVE	1
7	65330005	PUMP	1

Operating principles

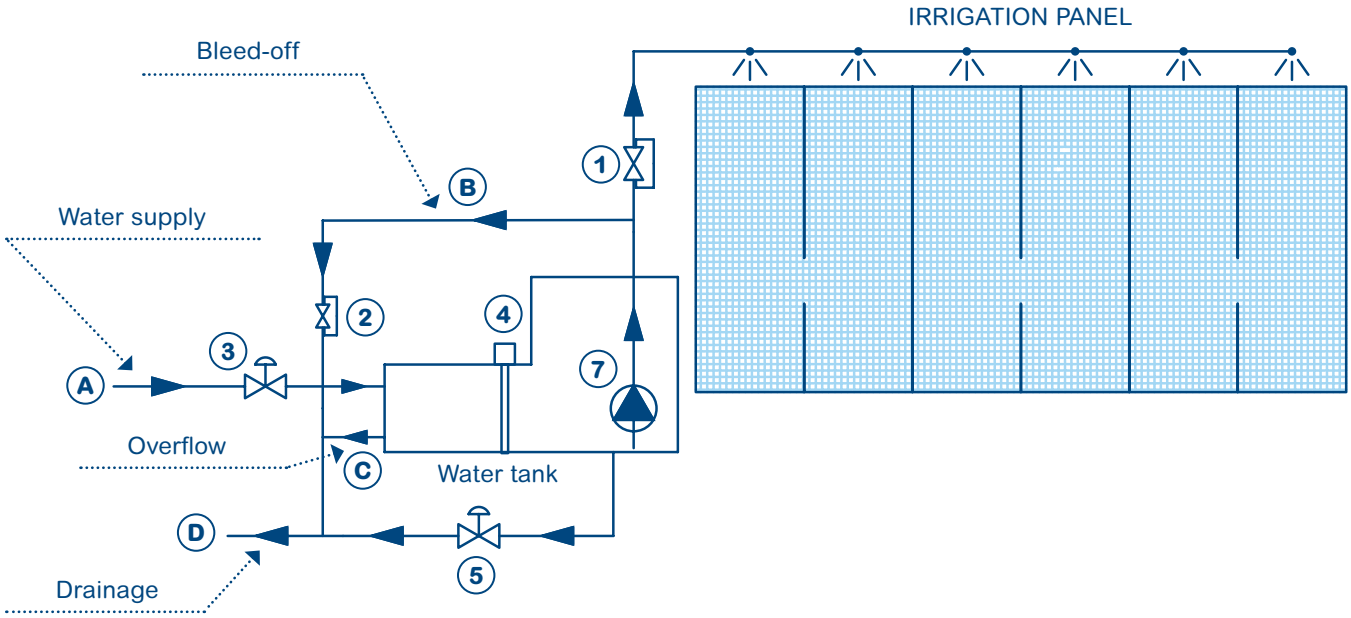

A	Water Supply
B	Constant Bleed-off
C	Overflow
D	Drainage
1	Regulation Valves with Flow Meter (Irrigation)
2	Regulation Valves with Flow Meter (Bleed-off)
3	Filling Solenoid Valves
4	Max/Min Level Detector
6	Valves with Actuator (Drainage)
7	Water Recirculation Pump

Installation requirements

OVERVIEW

To ensure optimum performance and maintenance, humidifiers must be placed on a level surface, with a drain, so possible leaks during installation, start-up, operation and maintenance can be controlled.

Assembly in conjunction with an air cooling unit must ensure the air passes through the evaporative panels, by closing off the perimeter sides to prevent a potential bypass in the air flow, and ensure the adiabatic performance of the design.

PLACEMENT AND SERVICING SPACE

Humidifiers are normally placed just before the coil and before the sensible exchange in the air cooling system.

A 1m space should be left in front of the unit section for inspection and servicing.

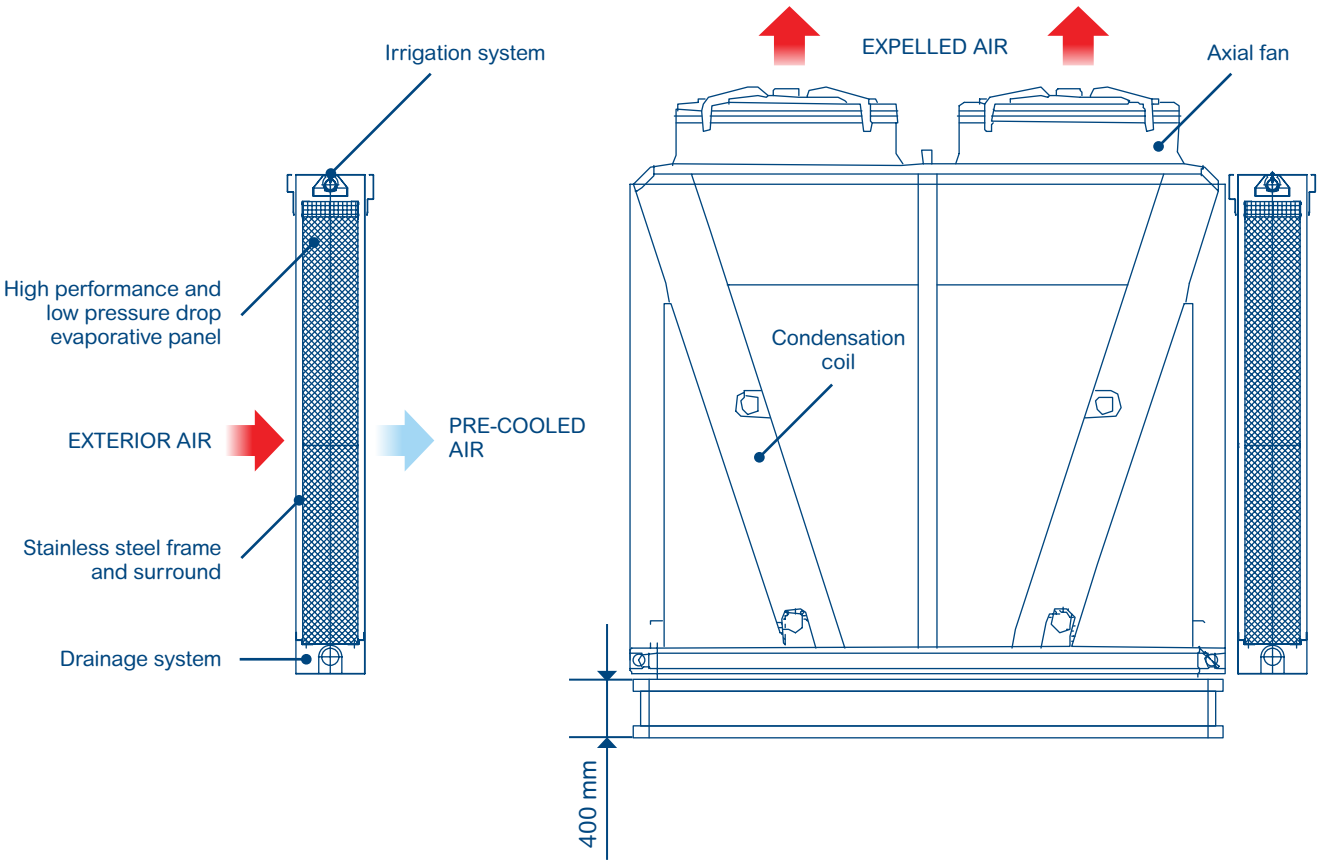

Connections and regulation

OVERVIEW

FISAIR HEF7 evaporative humidifiers essentially work in accordance with the irrigation of the evaporative panels. Humidification occurs whenever there is an air current passing through and the water pump irrigates the panels.

[Note]

In order to eliminate superficial dust on the panels, and to prevent its transmission to occupied areas, the water irrigation pump should be left operating for 6 hours with no air flow, to wash the panels. Subsequently, the water used for washing should be drained before normal start-up.

WATER CONNECTIONS

- Connect the water network supply to the ½" filter in Y, and this to the solenoid supply valve.
- Connect the common outlet for the 50mm diameter drain / overflow / constant bleed-off to the drainage network.
- The water outlet connection to the drain must have a water trap or seal, as shown in the figure, large enough to overcome system pressure in order for the tank to drain completely, for hygiene reasons. The system has the normal slope of any drainage line.

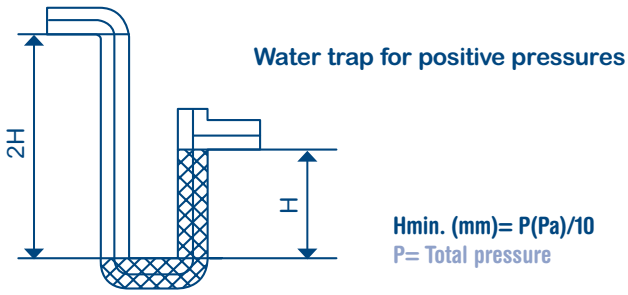

Water trap for positive pressures

Hmin. (mm)= P(Pa)/10
P= Total pressure

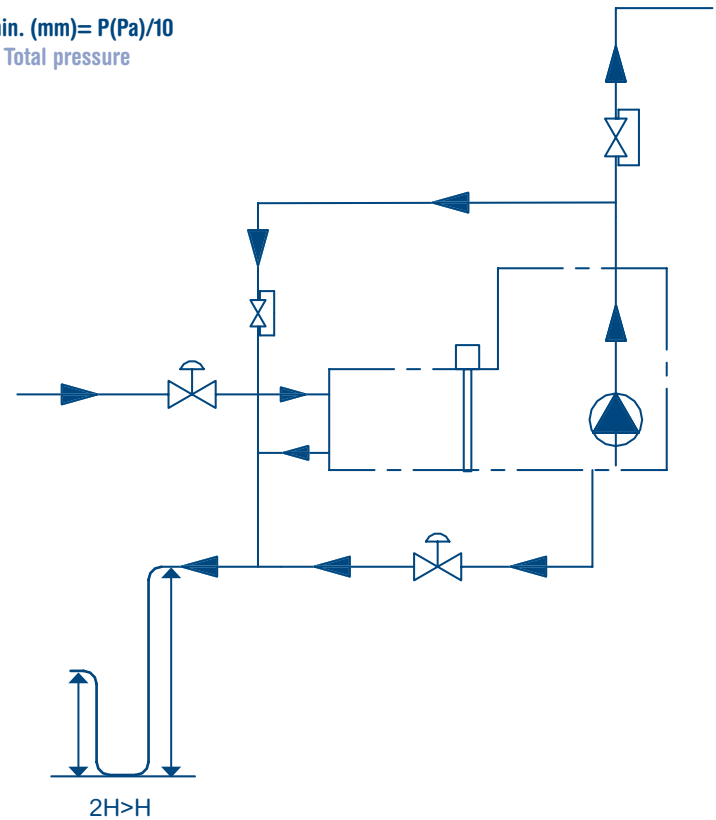

Recirculation pump electricity connection

Connect the electricity supply cable to the terminal box of the water irrigation pump using an appropriate connection (IP-55 or higher).

The protection and operations of the pump electricity supply must be decided upon by the system project designer.

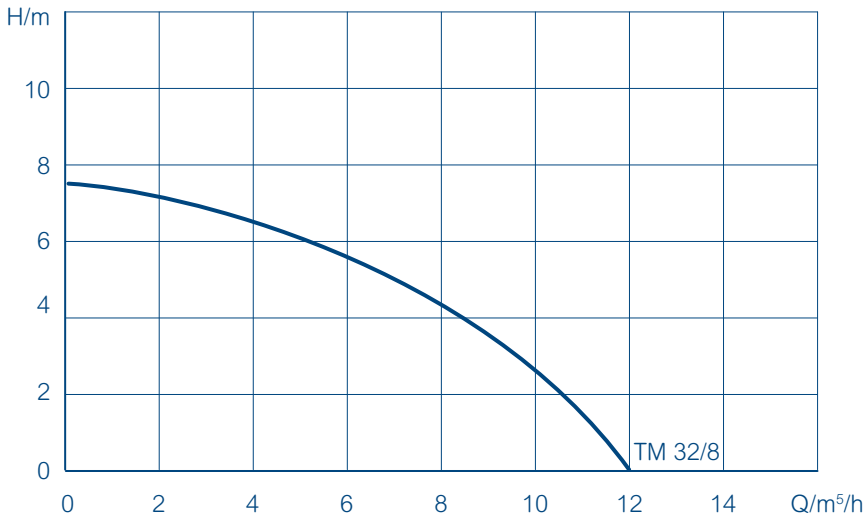

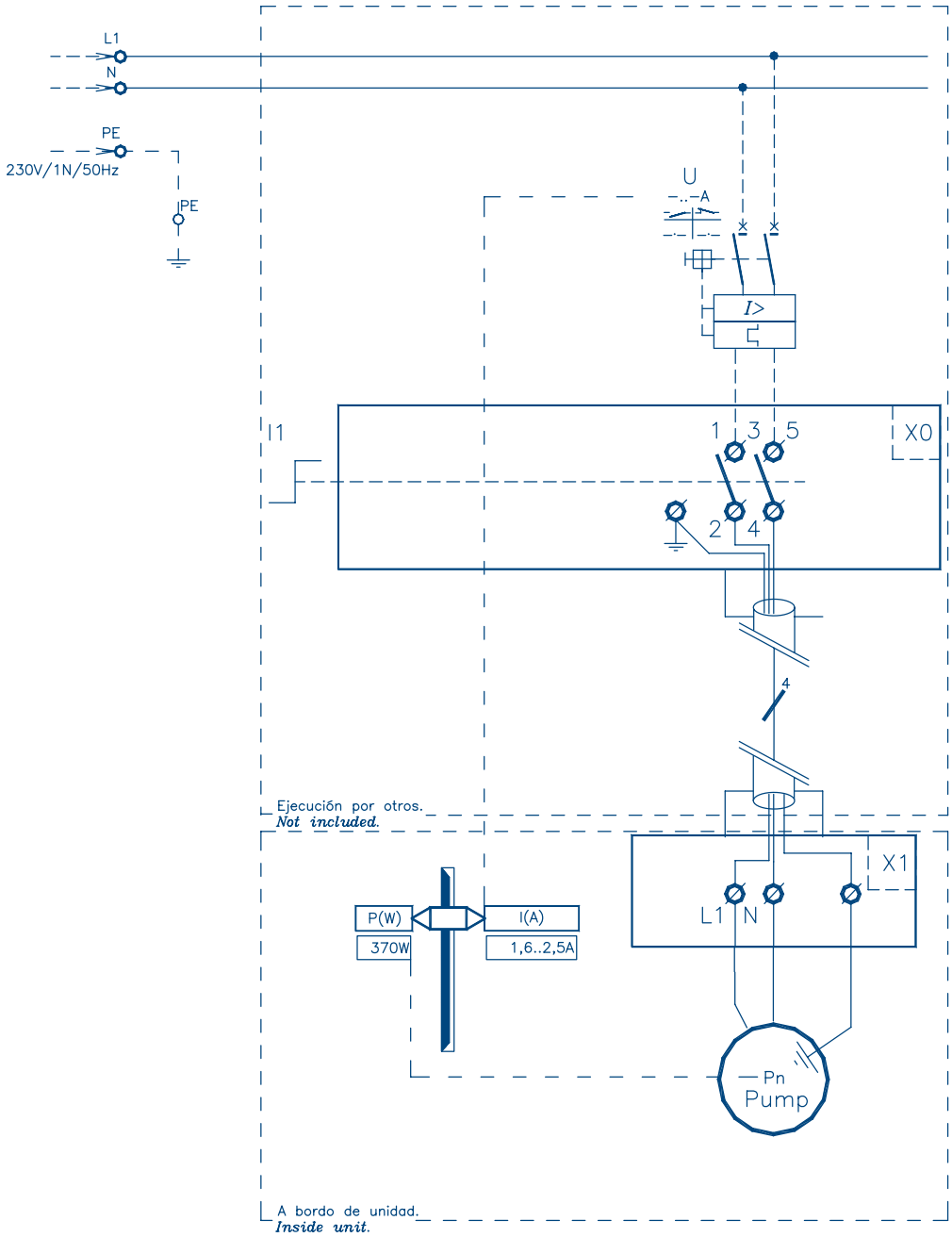

Level detector electricity connection

1. Minimum level detector (low level S1):

Level detector must be connected to protect the water pump working. Water level in basin is detected by this level detector (J17 sensor indicates minimum water level NO, take a look on CCB2.0 or CCE2.0 manual).

2. Maximum level detector (high level S2):

The maximum level is used as a security system in a float valve regulation water feed possible failure event. It must not be used to regulate the fresh water inlet. In case the equipment has a filling solenoid valve, connect it to this level so that it is cut for safety (J16 sensor indicates maximum water level NC, take a look on CCB2.0 or CCE2.0 manual).

Remark: Max Voltage: 175 Vcc / 110 Vca
Max Current: 1 Acc
Temperature: -20...120ºC
Min. Density: 0, 75 gr/cm3

Example connection to CCB2.0 or CCE2.0

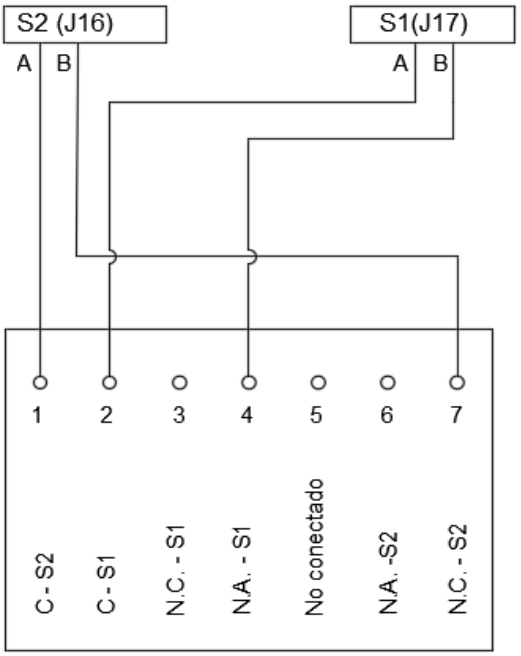

N.C. = normally closed ALTO= High level S2
N.A. = normally open BAJO= Low level S1
C= Common

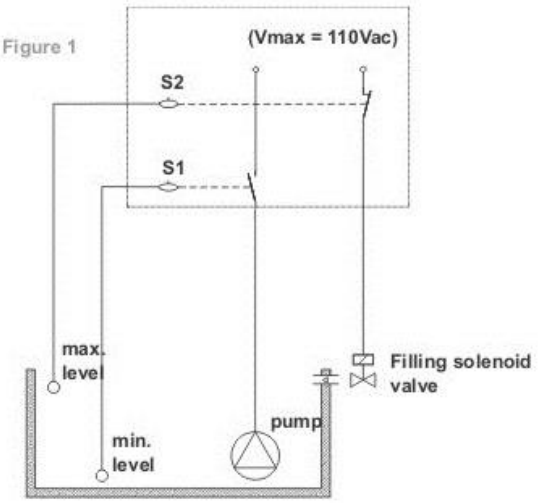

Figure 1: Explanatory diagram to confirm which componentsare managed by levels S1 and S2. It's not a unifilar diagram.

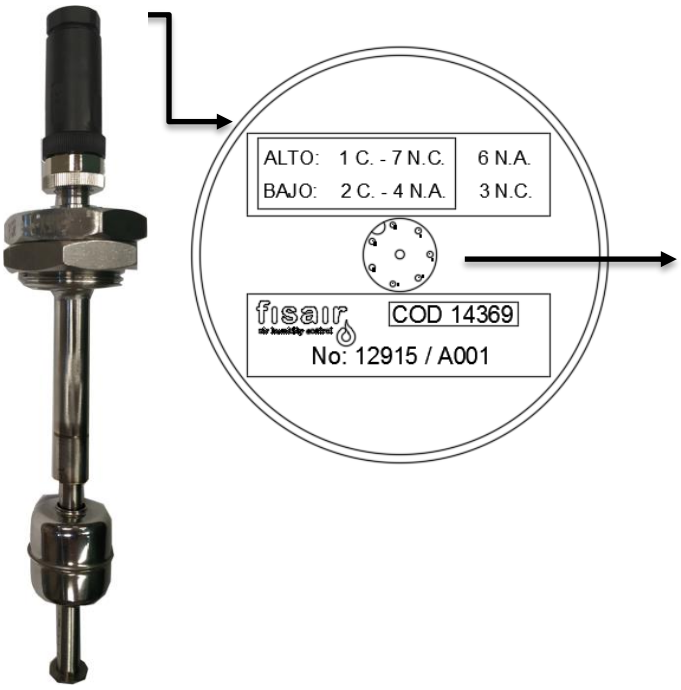

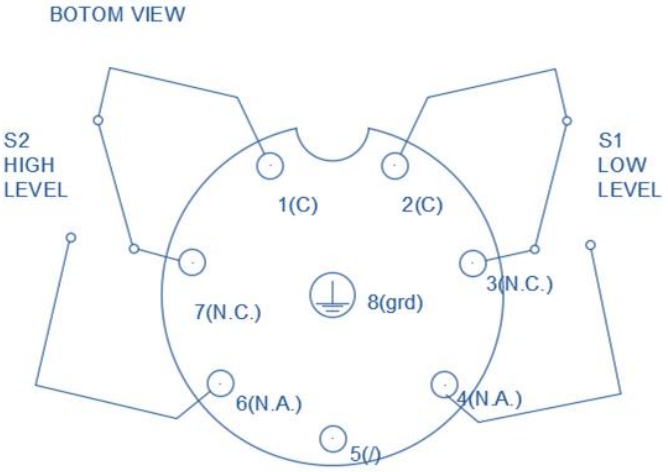

Pin assignment M12 socket, 8-pos., A-coded, view female side

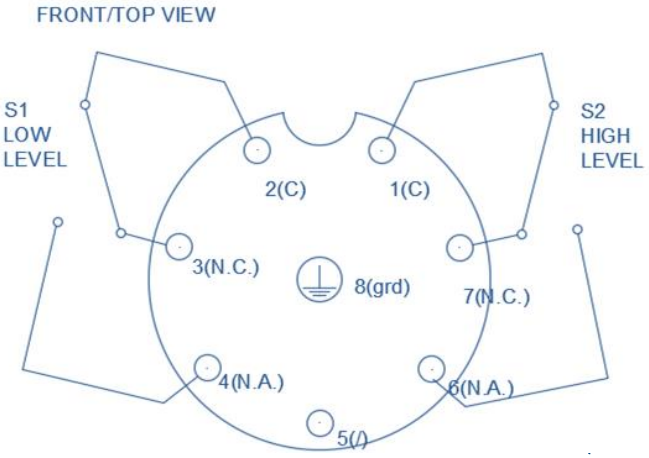

N.C. = normally closed ALTO= High level S2

N.A. = normally open BAJO= Low level S1

C= Common

Remark: **Pin 5 (/) must be left without connection.**

Mesh to fix the float:

Remark: **Remove the fixing mesh when the equipment is placed on its final location just before commissioning.**

Solenoid valve electricity connection

The water supply NC solenoid valve of the tank is composed of the body of the valve, the coil and the connector.
The coil and the connector are supplied for a 24Vac or 230Vac connection.

G ½" brass water supply N.C. solenoid valve

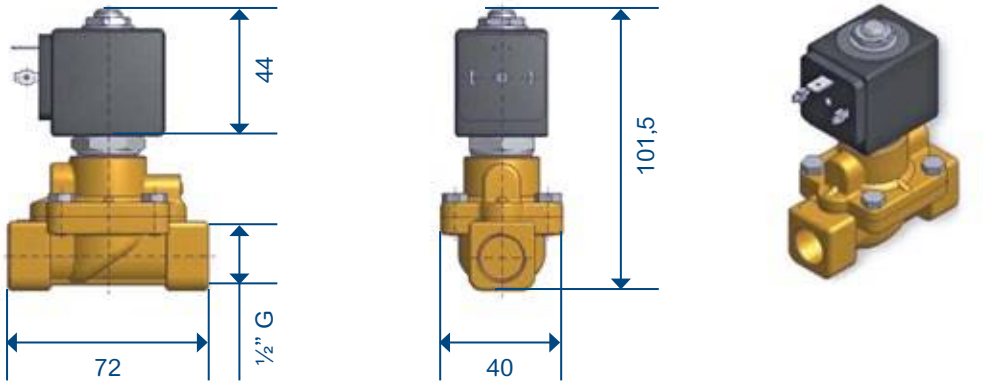

24V connector (L1+N+T)
230V connector (L1+N+T)

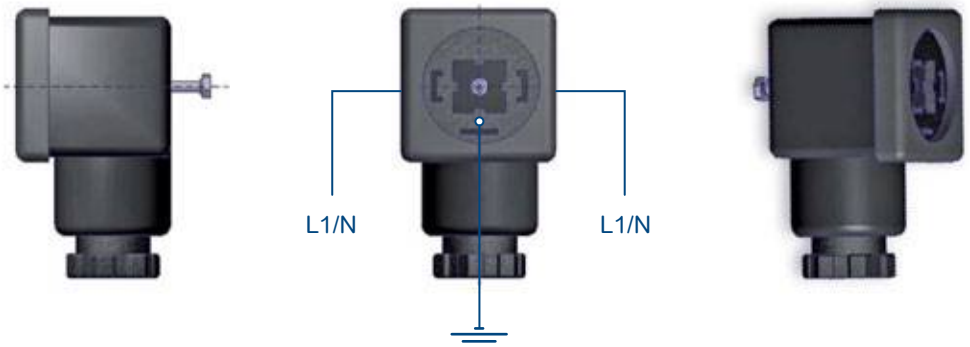

230V or 24V coil (50/60 Hz)

MOTOR-ZONE VALVE

Datos técnicos		
AC 24 V DC 24…48 V supply (SELV/PELV)	Operating voltage AC / Frequency	AC 24 V ± 20 % / 50/60 Hz
	Operating voltage (DC)	DC 24…48 V ±20 %
	Power consumption	AC: 5 VA / 3.5 W // DC: 3.5 W
AC 230 V supply	Operating voltage / Frequency	AC 230 V ± 10 % / 50/ 60 Hz
	Power consumption	7 VA / 4.5 W
Function data	Nominal torque	7 Nm
	Runtime for rotary angle 90° (motor operation)	90 s
	Closing time with return spring (on power failure)	15 s
Auxiliary switch	AC power supply	
	Switching voltage	AC 24...230 V
	Nominal current res./ind.	6 A / 2 A
	DC power supply	
	Switching voltage	DC 12..30 V
	Nominal current	DC 2 A
	Switching range for auxiliary switches / Setting increments	5°...90° / 5°
Connection cables	Cross-section	0,75 mm2
	Standard length	0,9 m
Degree of protection of housing	Degree of protection as per EN 60 529	IP 54
Protection class	Insulation class	EN 60 730
	AC/DC 24 V, feedback potentiometer	III
	AC 230 V, auxiliary switch	II
Environmental conditions	Operation / Transport	IEC 721-3-3 / IEC 721-3-2
	Temperature	−32...+55 °C / −32...+70 °C
	Humidity (non-condensing)	< 95% r. h. / < 95% r. h.
Weight		1.2 kg.

Electric Diagram connections

GMA12..1 / GMA32..1

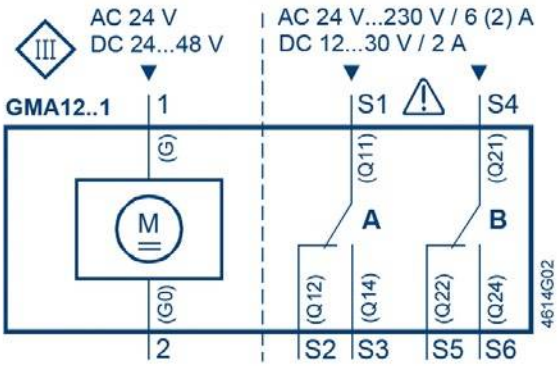

2 points control
AC 24 V

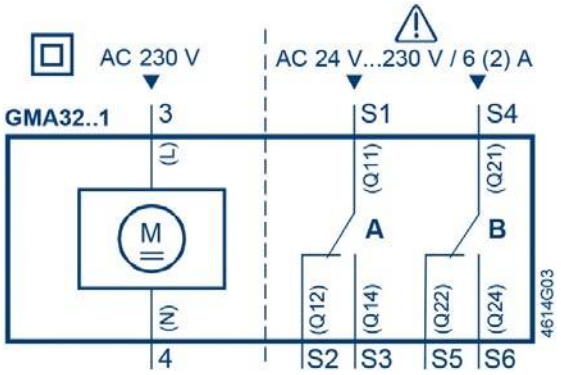

2 points control
AC 230 V

Dimensions

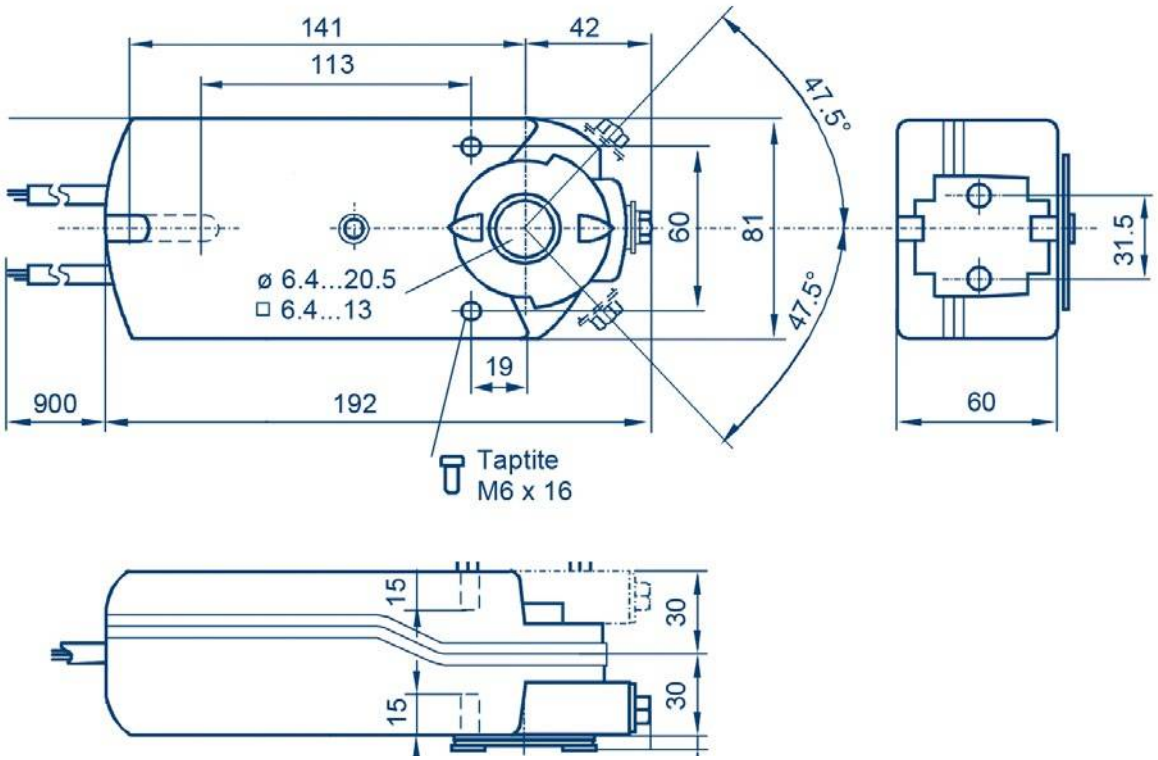

Manual positioning

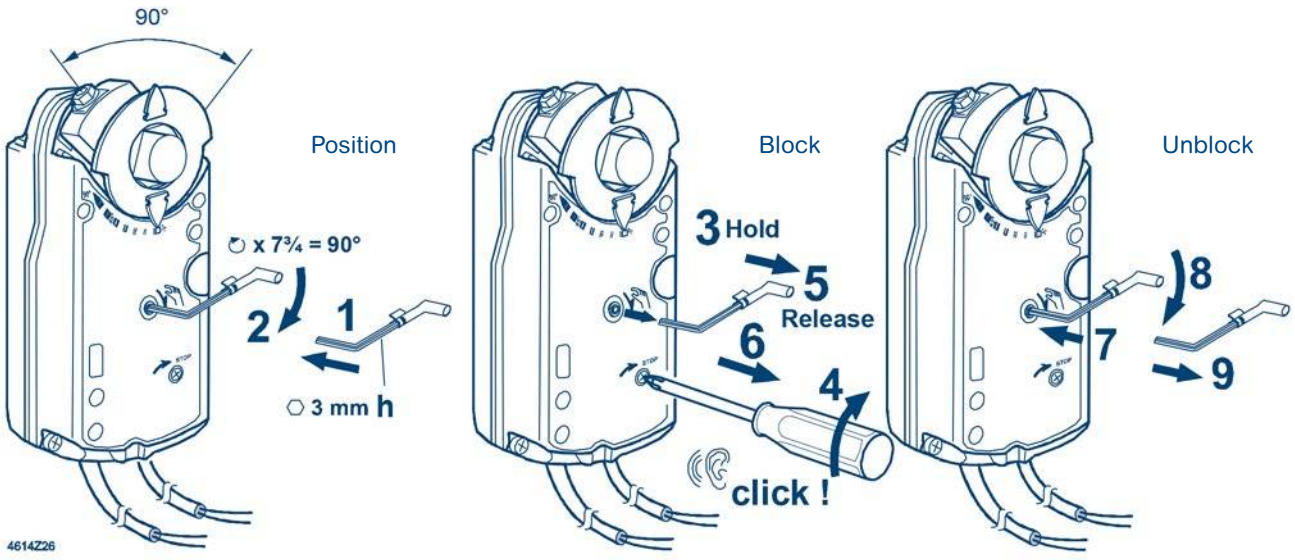

Adjusting: A, B Auxiliary contacts

Factory setting

A= 5°
B= 85°

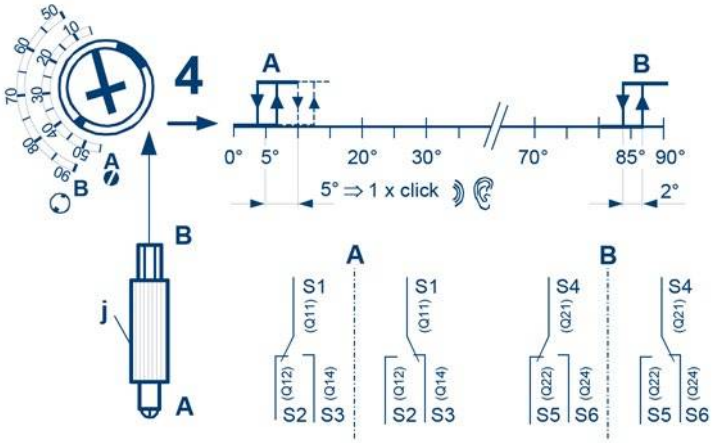

Cable labeling

Pin	Cable				Meaning
	Code	No.	Color	Abbrev.	
Actuators AC 24 V DC 24…48 V	G	1	red	RD	System potential AC 24 V/DC 24…48 V
	G0	2	black	BK	System neutral
Actuators AC 230 V	L	3	brown	BN	Phase AC 230 V
	N	4	blue	BU	Neutral conductor
Auxiliary switch	Q11	S1	grey/red	GY RD	Switch A input
	Q12	S2	grey/blue	GY BU	Switch A normally-closed contact
	Q14	S3	grey/pink	GY PK	Switch A normally-open contact
	Q21	S4	black/red	BK RD	Switch B input
	Q22	S5	black/blue	BK BU	Switch B normally-closed contact
	Q24	S6	black/pink	BK PK	Switch B normally-open contact

Setting the valve regulating irrigation flow

Set the valve for the irrigation of the panels to ensure uniform watering of the surface area of the panels. A value of around 1 litre/second for each square metre of irrigation surface is enough to exceed the water required for evaporation. Generally, it is just necessary to ensure there is excess water from panel irrigation falling into the water tank.

The excess irrigation water ensures the surfaces of the panels are constantly being washed.

The following equation for calculating the total irrigation flow of each HEF-7 can be employed to set the regulation valve precisely.

$$I = e * 60 * \sum_{i=0}^{n} a_i$$

I = total unit irrigation

e = thickness of the evaporative cassettes in metres

a = width of the evaporative cassettes in metres

i = evaporative cassettes

n = total number of evaporative cassettes

Example:

I = 0,2 * 60 * (0,6 + 0,6 + 0,6 + 0,45 + 0,6 + 0,6 + 0,6 + 0,42 + 0,32 + 0,32 + 0,45) = 66,72 L/min

To set the valve to the calculated irrigation flow, a 6mm Allen key is used. Flow at any time can be observed in the flow indicator. For the valve to reach its limit, the screw must be turned several times, which enables precise settings. To fix the set flow, use an 8mm Allen key, which ensures a constant irrigation flow.

Setting the valve regulating the bleed-off flow

Water evaporation is caused by a higher water vapour pressure in the evaporative panel than in the air moving across it. Because only the water evaporates, dissolved mineral salts remain in solution, and gradually increase in concentration, despite new water being added to compensate for the evaporation.

To prevent the formation of mineral deposits on the surfaces of the evaporative panel (this would lead to a progressive decrease in air pressure and in operating performance) it is essential to discharge some of the recirculated water to the drainage network in tandem with the evaporation.

Analytical parameters of the drinking water network.

Water hardness: (CaCO3): 50-170 ppm
Chlorine: (Cl): <55 ppm
pH: 6-8
Silica: (SiO): <30 ppm
Iron (Fe): <0.2 ppm
Oils and grease: <2 ppm
Total dissolved solids: <550ppm
Total alkalinity: (CaCo3): 50-170 ppm
Suspended solids: <5 ppm

Bleed-off based on the cycle of concentration COC.

Bleed-off=Evaporation/(COC-1)

Cycle of concentration COC based on conductivity (100-1000 µS/cm)

Observation: Always using the parameters of the drinking water network.
100 µS/cm = 9 COC
550 µS/cm = 6 COC
1000 µS/cm = 2 COC

Calculation example:

Based on parameters of the drinking water network
Water evaporation=3.23 l/min
Water conductivity=550 µS/cm
COC=6
Bleed-off= 3.23/(6-1)= 0.65 l/min

The flow of the bleed-off valve can be set approximately to begin with as 10% of total irrigation flow. By regularly observing the state of the panels (on the air input side); after 1 to 2 weeks working, if there are no signs of mineral deposits whitening the surface, the bleed-off flow can be reduced or left the same, or, if on the other hand, lime deposits are noticeable, it can be increased.

Set the flow of the bleed-off valve by removing the handwheel from its parked position and placing it on the flow meter. It can then be swivelled to set the required flow. Once the flow has been set, place the handwheel in its parked position once again.

Maintenance and cleaning

Humidifier components are very easy to maintain. The following elements require maintenance:

- **The irrigation pump:** The most important thing is to monitor to ensure dirt does not obstruct the suction-impulsion circuit, and electricity consumption is below the power rating on its plate.
- **Control valves:** These must be inspected in accordance with their mechanical regulation.
- **Solenoid valve:** This must be inspected in accordance with its mechanical closure and opening.
- **Metal filter:** This must be cleaned manually.
- **Evaporative panels:** For drinking and industrial water supplies their operating life basically depends on the constant bleed-off system for mineral salts working correctly to prevent the formation of lime deposits on surfaces. If it is not regulated properly, the panels have to be replaced in a short period of time, because the air passing through the panels becomes blocked by the formation of these deposits.
- **Water tank:** Elements holding bodies of still water are renowned for generating microorganisms, and algae. The maintenance director must implement an inspection plan for emptying and cleaning the HEF-7 pump tank based on the quality of the air treated and the water supply.

Regular observations are recommended for correct maintenance during the days following start-up, to find out how the specific installation is behaving, and to establish the emptying and cleaning programme. Similarly, during long periods of inactivity (summer in the case of humidification for comfort, and winter for evaporative refrigeration) it is essential to totally empty and clean the tank.

Evaporative humidifiers must be cleaned on a regular basis to prevent their contamination. All the surfaces of the components (panel, pipes and especially the water tank) must be disinfected using an appropriate solution.

Element	Maintenance and Cleaning
IRRIGATION PUMP	Monthly
CONTROL VALVES	Annually
SOLENOID VALVES	Annually
METAL FILTER	Monthly
EVAPORATIVE PANELS	Quarterly
WATER TANK	Quarterly

Special attention must be paid to cleaning the piping system, and above all the junctions.

In the case of the panels, the use of chemical disinfectants for daily maintenance is not recommended because it could reduce panel efficiency and the useful life. If it is necessary to use chemical products, either because the system has not been operational for a long time, or for any other reason, an effective method is to submerge the panels in a chlorine disinfectant, such as sodium hypochlorite (bleach) or sodium percabonate. When using chlorine disinfectants, it is essential to take into account the formation of toxic chlorine gas if it is combined with an acid solution.

[Note]

Do not forget to employ the safety measures of the manufacturer of the disinfectant solution.

As regards the disinfection of the remaining components, the same bleach disinfectant solution can be employed. The number and regularity of the application of disinfection processes must be established by the person responsible for the installation, taking into account the length of time the unit is operational, its placement, piping system, water quality, etc.

As a result, it is worth insisting once more on the importance of good operational practice, based mainly on the appropriate regulation of the bleed-off system and correctly regulating the irrigation/drainage.

Another highly recommended practice is to add water treatment to the humidifier supply.

In order to remove the evaporative cassettes from the units, it is necessary to take off the upper front cover of the structure by removing the front screws as shown in the image below.

Once the cover has been removed, the central cassettes are taken out so the cassettes each end can then be slid to the centre and also removed from the unit in the same way as the others.

In order to assemble the cassettes in the unit, it is first necessary to insert the end cassettes through the centre of the structure and slide them into position. Subsequently the central cassettes can be put into position. Then, the upper front cover of the structure can be put in place and the screws attached tightly to secure the evaporative panels.

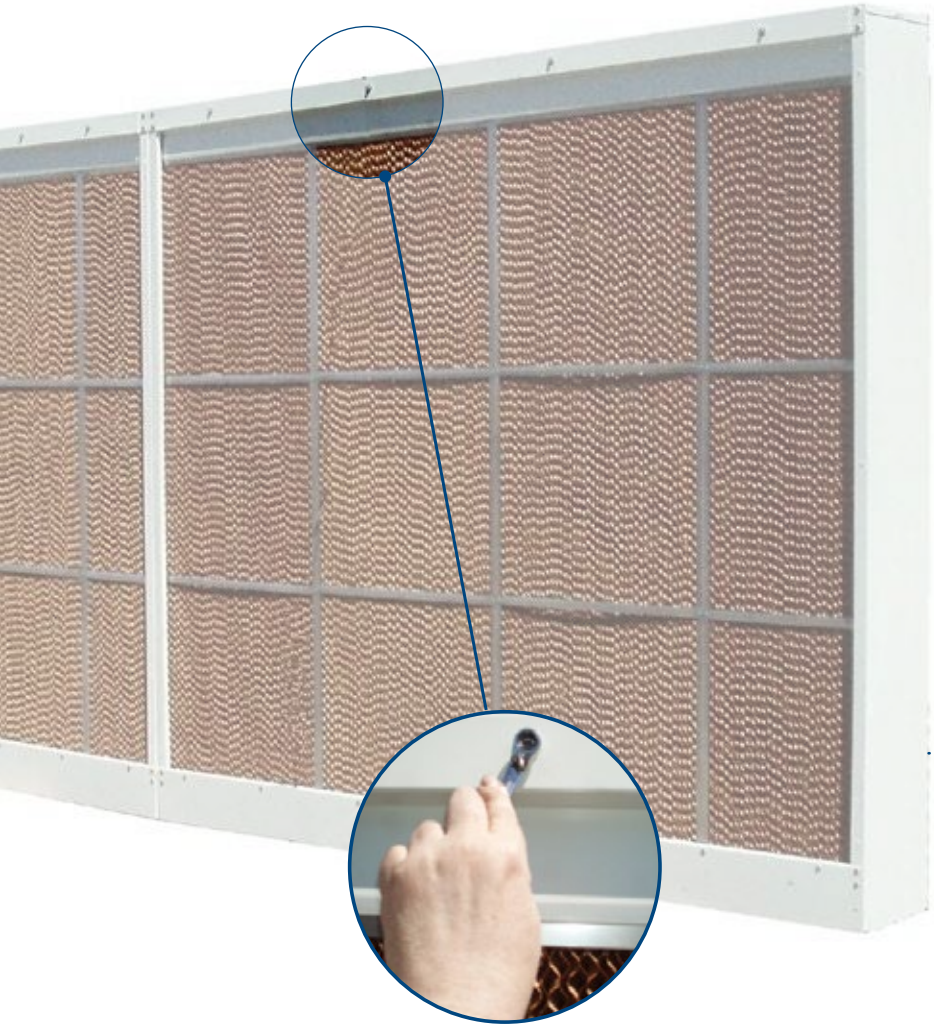

CE Declaration of Conformity

Technical Direction Department
Departamento de Dirección Técnica

Abteilung von der technischen Leitung
Département de Direction Technique

fisair
air humidity control

Uranio, 20, Pol. Ind. Aimayr 28330 S. Martín de la Vega MADRID (SPAIN)
Tel. (34) 916921514 Fax (34) 91691645 6
info@fisair.com www.fisair.com

WE DECLARE, under our own responsability that the air humidifier:

DECLARAMOS Bajo nuestra única responsabilidad que el humidificador de aire:
Unter unserer ausschließlicher Verantwortung ERKLÄREN WIR, daß der Luftbefeuchter:
NOUS DECLARONS, sous notre unique responsabilité que l'humidificateur d'air:

BRAND/MARCA/MARKE/MARQUE:

FISAIR

MODEL/ MODELO/MODELL/MODELE:

HEF7

Meets the regulations:
Se adapta a las normas:
Den Normen entspricht:
S'adapte aux normes:

* **EN 12100-1**
* **EN 12100-2**
* **EN 60204-1**
* **EN 61000-6-1**
* **EN 61000-6-3**
* **EN 13857**

Conforms to the essential requirements of the Directives:

Es conforme a los requisitos esenciales de las Directivas:
Und den von den Richtlinien aufgestellten Grundvoraussetzungen Rechnung trägt:
Et est conforme aux conditions essentielles des Directives:

* **2006/42/CEE**
* **2004/108/CEE**
* **2006/95/CEE**

With no liability for the parts or components added or assembled by the customer.

Con exclusión de responsabilidades sobre las partes o componentes adicionados o montados por el cliente.
Unter Ausschluß der Verantwortung über die vom Kunden bereitgestellten und/oder angebauten Teile.
Avec exclusion des responsabilités concernant les parties ou les composants ajoutés ou assemblés par le client.

Technical Direction Department/Departamento Dirección Técnica/Département de Direction Technique/
Abteilung von der technischen Leitung:

Hugo J. López Álvarez
San Martin de la Vega, August 2014

FISAIR S.L. Guarantee Policy

Technical Direction Department
Departamento de Dirección Técnica

fisair
air humidity control

Uranio, 20, Pol. Ind. Aimayr 28330 S. Martín de la Vega MADRID (SPAIN)
Tel. (34) 916921514 Fax (34) 91691645 6
info@fisair.com www.fisair.com

2 Years of Limited Guarantee

FISAIR provides clients with the guarantee that its product will not suffer material damage or damage to parts for a period of 2 years from installation, or twenty seven months from the product dispatch date, whichever is earlier.

If any FISAIR product is found to be faulty as regards materials or assembly during the guarantee period, FISAIR is completely liable, and the only exclusive right of the consumer is the repair or replacement of the faulty product or piece.

Disclaimer of Warranty and Limitation of Liability

FISAIR will not be held liable for any direct or indirect cost or expense related to the installation, disassembly or reinstallation of any faulty products.

The limited guarantee does not include consumables such as joints, pulleys, filters or evaporative panels.

The FISAIR limited guarantee will not come into effect or be actionable:

a) If bills for the product have not been paid in their entirety or in part, or have not been satisfied in the form or by the deadline stated.

b) Unless all the installation and operation instructions provided by FISAIR are complied with, or if the products have been modified or altered without written consent from FISAIR, or if the products have been subjected to incorrect use, improper handling, alteration, inappropriate maintenance or show the effects of an accident or negligent use. These situations could arise as the result of incorrect supply, dents caused by other objects, the cancellation of safety measures, etc.

All guarantee claims must be submitted to FISAIR in writing within the established guarantee period.

Guarantee of Piece

FISAIR may require faulty pieces to be returned. In the event that any faulty pieces are needed, FISAIR will request that the client sends the goods back to the factory for analysis. Whether the piece is faulty because of any of the circumstances described above, (see section on Disclaimer of Warranty and Limitation of Liability), or because the piece is truly faulty.

If pieces have to be replaced immediately, FISAIR will send a new piece, which will be billed with payment due 30 days from the dispatch date. If the client returns the faulty piece during the 30 day period, FISAIR will analyze the causes of the fault, and will issue an expert report on coverage based on conditions described in the document.

In the event that the piece is faulty because of a production problem, poor product quality, or improper handling by FISAIR, FISAIR will pay the bill by way of stopping payment. In the event that FISAIR does not receive the piece in the established period, of if the problem is the result of one of reasons included in the paragraph on the guarantee, payment will be made effective.

In the event that a part of the product is lost, or an incident occurs during shipment, the client will provide notification of this within three days of the dispatch reception date.

FISAIR S.L. Guarantee Policy

Technical Direction Department
Departamento de Dirección Técnica

fisair
air humidity control

Uranio, 20, Pol. Ind. Aimayr 28330 S. Martín de la Vega MADRID (SPAIN)
Tel. (34) 916921514 Fax (34) 91691645 6
info@fisair.com www.fisair.com

Guarantee Servicing Coverage

In the event that any FISAIR product requires after-sales technical work so it can once again be used for the purpose it was originally designed, FISAIR will authorize the person/s responsible for this operation. These technicians must be qualified, and have sufficient knowledge to service FISAIR units.

No company can provide guarantee services without the written consent of FISAIR, which gives authorization for this. And if FISAIR has to cover any of the cost, notification must be given before the work/service is completed. In the event that FISAIR has to send its own personnel to solve the problem, travel expenses are not covered by the guarantee.

FISAIR limited guarantees replace any other guarantees, and FISAIR will not be held liable for any other guarantee, including, but not limited to, guarantees implicit in merchantability, or those referring to fitness for a purpose determined by others, in any circumstance, as regards direct, indirect, incidental, special or consequential damage. Neither will liability be accepted for damage to persons or property derived from the use of our products. The purchaser accepts the conditions of this guarantee on buying these products.

Guarantee Extension

The user can extend the terms of the FISAIR limited guarantee for a limited number of months, once the initial guarantee period comes to an end. All the conditions applicable to the Limited Guarantee during the initial period will be applied to the extension period.

Each case will be evaluated in accordance with the type of product, the application of the unit, and the product placement.

In order for any Limited Guarantee extension to be valid under these conditions, it must be in writing, accepted and signed by FISAIR, and paid by the purchaser in its entirety.

Hugo J. López Álvarez
San Martin de la Vega, August 2014

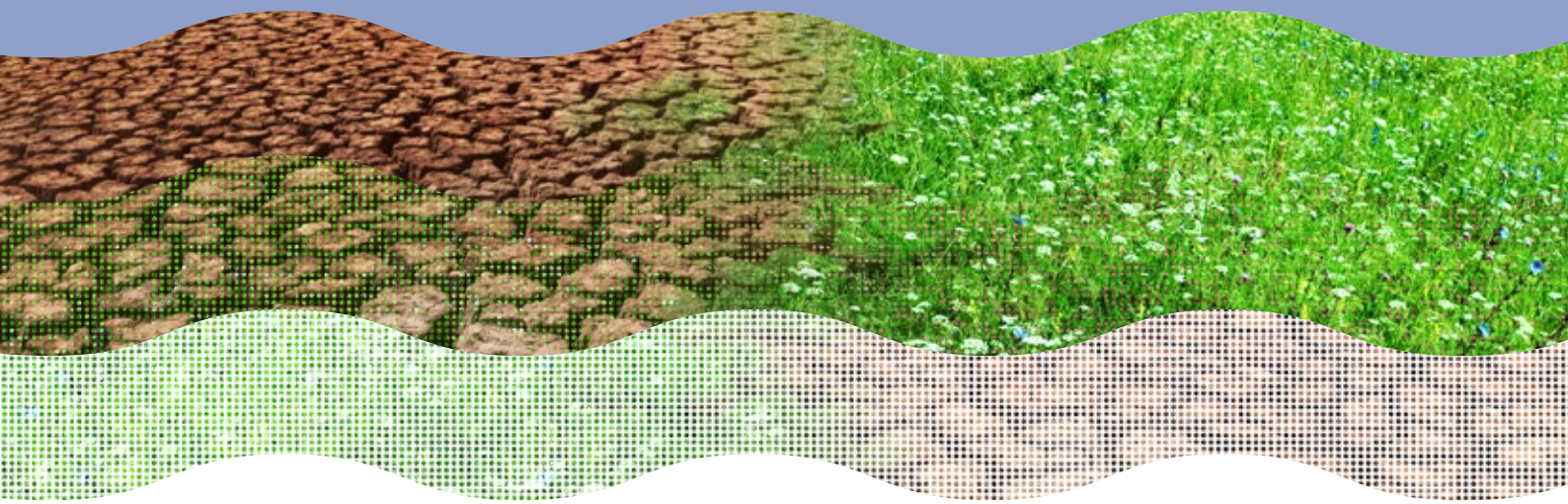

HEF7

Installation and maintenance manual

fisair
air humidity control

Uranio, 20, Pol. Ind. Aimayr 28330
S. Martín de la Vega MADRID (SPAIN)
info@fisair.com www.fisair.com